Radio control model
R/C Flugmodell

INSTRUCTION MANUAL
MONTAGEANLEITUNG

U.S ARMY L4A

GRASSHOPPER



TECHNISCHE DATEN

Spannweite	2710mm
Länge	1720mm
Elektroantrieb	(siehe nächste Seite)
Verbrennerantrieb	26-30cc 2-T
Fernsteuerung	6 Kanal / 8 Servos

SPECIFICATIONS

Wingspan	**106.6in.**
Length	**67.7 in.**
Electric Motor	**(See next page)**
Glow Engine	**26-30cc two stroke**
Radio	**6 Channel / 8 Servos**

WARNING! This radio controlled model is NOT a toy. If modified or flown carelessly it could go out of controll and cause serious human injury or property damage. Before flying your airplane, ensure the air field is spacious enough. Always fly it outdoors in safe areas and seek professional advice if you are unexperienced.

ACHTUNG! Dieses ferngesteuerte Modell ist KEIN Spielzeug! Es ist für fortgeschrittene Modellflugpiloten bestimmt, die ausreichende Erfahrung im Umgang mit derartigen Modellen besitzen Bei unsachgemäßer Verwendung kann hoher Personen- und/oder Sachschaden entstehen. Fragen Sie in einem Modellbauverein in Ihrer Nähe um professionelle Unterstützung, wenn Sie Hilfe im Bau und Betrieb benötigen. Der Zusammenbau dieses Modells ist durch die vielen Abbildungen selbsterklärend und ist für fortgeschrittene, erfahrene Modellbauer bestimmt.

REQUIRED FOR OPERATION (Purchase separately)
BENÖTIGTE KOMPONENTEN FÜR DEN ABFLUG (Nicht enthalten)

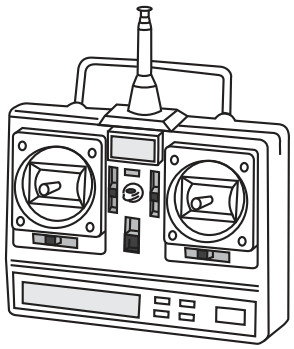

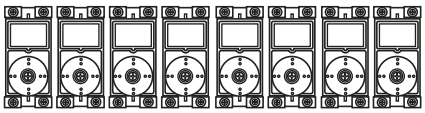

Minimum 6 channel radio
for airplane with 8 servos
.Motor control x1 .Aileron x2
.Elevator x2 .Rudder x1 .Flap x 2

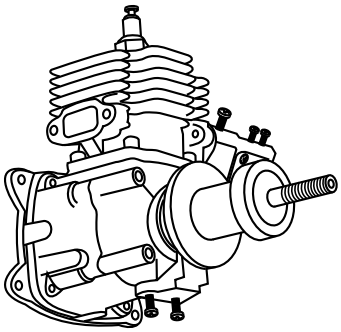

Gas Engine: 26 ~ 30cc

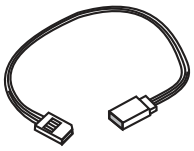

Extension for aileron
servo, Flap servo.



Nylon tube

GLUE (Purchase separately)



Silicon sealer

Cyanoacrylate
Glue
Klebstoff





Epoxy Glue (5 minute type)
Epoxy-Klebstoff (5min-Typ)



Epoxy Glue (30 minute type)
Epoxy-Klebstoff (30min-Typ)

TOLLS REQUIRED (Purchase separately)

Hobby knife



Needle nose Pliers

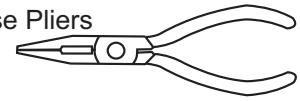

Sander

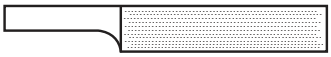

Phillip screw driver



Scissors

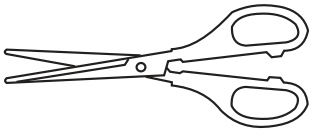

Hex Wrench



Awl



Wire Cutters

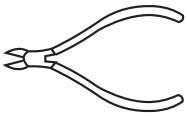

Masking tape - Straight Edged Ruler - Pen or pencil - Drill and Assorted Drill Bits

If exposed to direct sunlight and/or heat, wrinkels can appear. Storing the model in a cool place will let the wrinkles disappear. Otherwise, remove wrinkles in covering film with a hair dryer, starting with low temperature. You can fix the corners by using a hot iron.

Bei Sonneneinstrahlung und/oder Wärme kann die Folie erschlaffen bzw. Falten entstehen. Verwenden Sie ein Warumluftgebläse (Haartrockner) um evtl. Falten aus der Folie zu bekommen. Die Kanten können Sie mit einem Bügeleisen behandeln. Nicht zuviel Hitze anwenden !

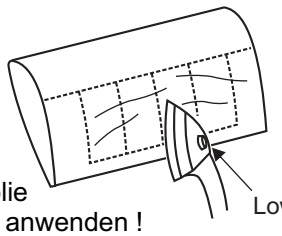



Drill holes using the stated size of drill (in this case 1.5 mm Ø)



Take particular care here



Hatched-in areas: remove covering film carefully



Check during assembly that these parts move freely, without binding



Use epoxy glue



Apply cyano glue



Assemble left and right sides the same way.



Not included.
These parts must be purchased separately



Löcher bohren mit dem angegebenen Bohrer (hier 1,5 mm)



Hier besonders aufpassen



Schraffierte Stellen, Bespannfolie vorsichtig entfernen



Während des Zusammenbaus immer prüfen, ob sich die Teile auch reibungslos bewegen lassen



Epoxy-Klebstoff verwenden



Sekundenkleber auftragen



Linke und rechte Seite wird gleichermaßen zusammengebaut



Nicht enthalten. Teile müssen separat gekauft werden.

Read through the manual before you begin, so you will have an overall idea of what to do.

CONVERSION TABLE

1.0mm = 3/64”	3.0mm = 1/8”	10mm = 13/32”	25mm = 1”
1.5mm = 1/16”	4.0mm = 5/32”	12mm = 15/32”	30mm = 1-3/16”
2.0mm = 5/64”	5.0mm = 13/64”	15mm = 19/32”	45mm = 1-51/64”
2.5mm = 3/32”	6.0mm = 15/64”	20mm = 51/64”	

HORIZONTAL STABILIZER - VERTICAL STABILIZER

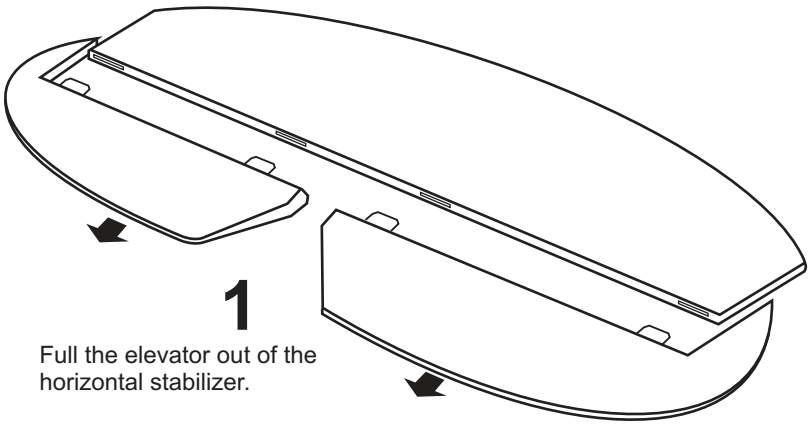

1

Full the elevator out of the horizontal stabilizer.

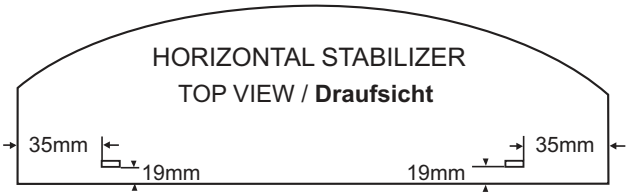

TOP VIEW / **Draufsicht**

Cut two slots (only the covering) on the top and along the trailing edge of the horizontal stabilizer.

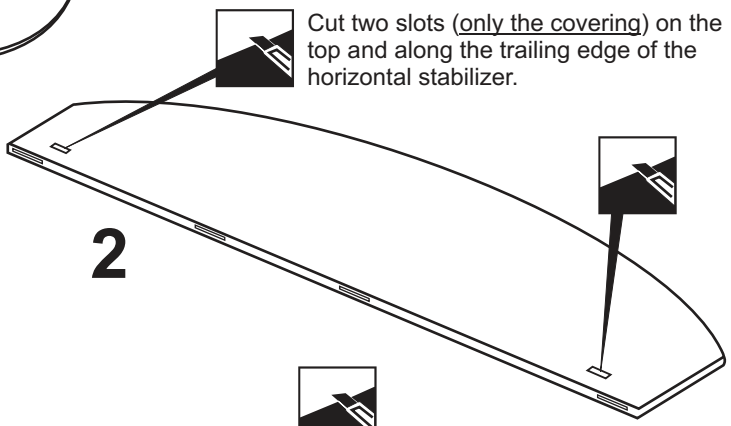

2

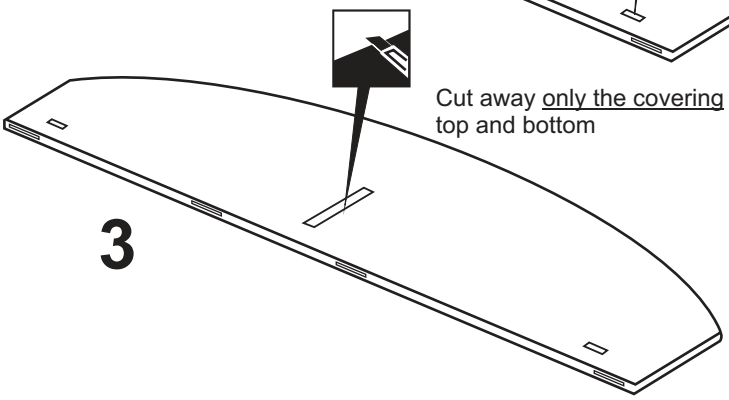

3

Cut away only the covering both side

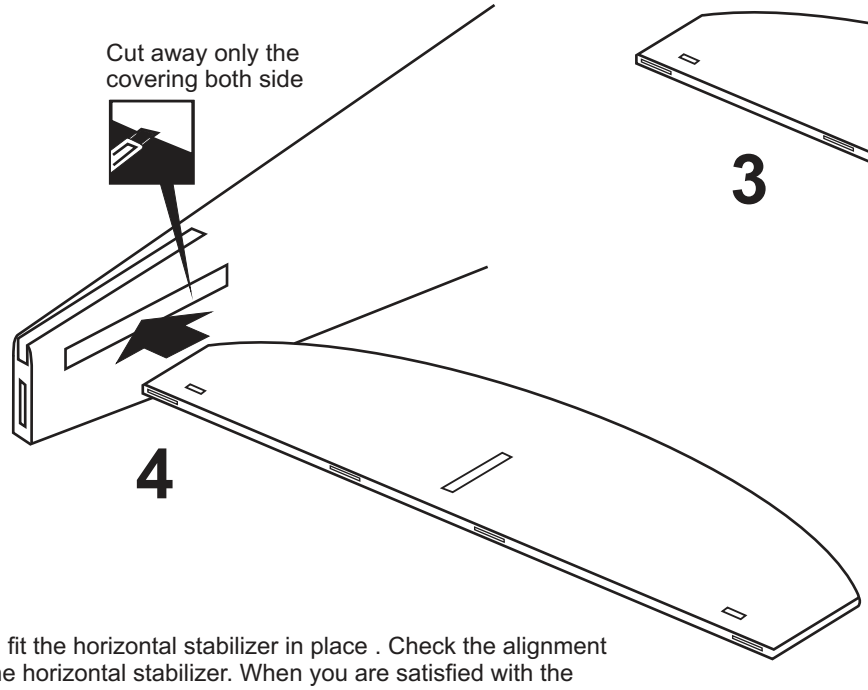

4

Trial fit the horizontal stabilizer in place . Check the alignment of the horizontal stabilizer. When you are satisfied with the alignment, use a pencil to trace around the top and bottom of the stabilizer where it meets the fuselage.

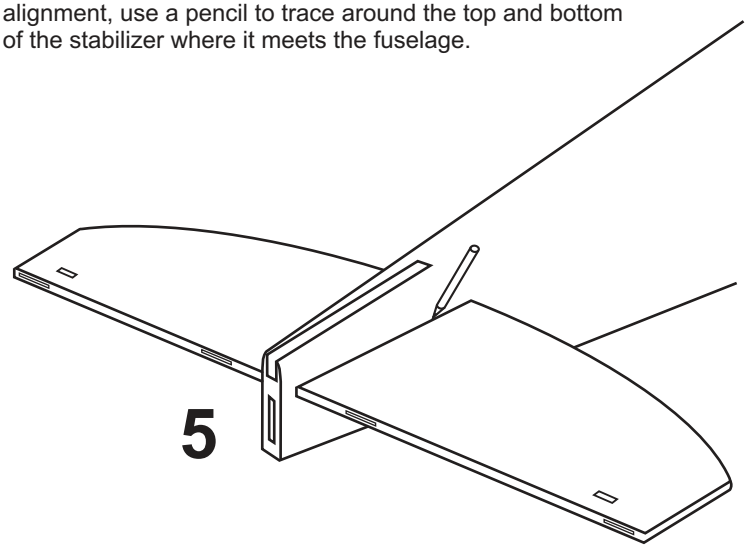

5

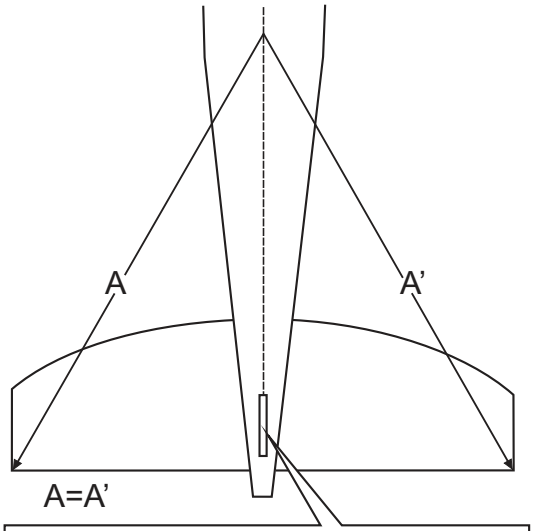

The slot on the horizontal stabilizer and the slot on the fuselage must be coincidental.

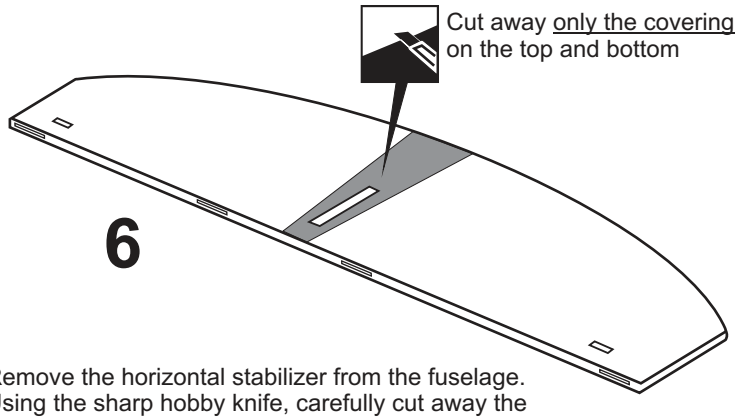

Remove the horizontal stabilizer from the fuselage. Using the sharp hobby knife, carefully cut away the covering inside the lines which were marked above.

Pull the horizontal stabilizer through the other side of the fuselage and repeat the previous procedures to glue the second torque rod wire into the horizontal stabilizer.

Realign the horizontal stabilizer, then glue the horizontal stabilizer into the fuselage, using a generous amount of thin CA. Apply thin CA to each of the four joints and use a generous amount to ensure to strong bond.

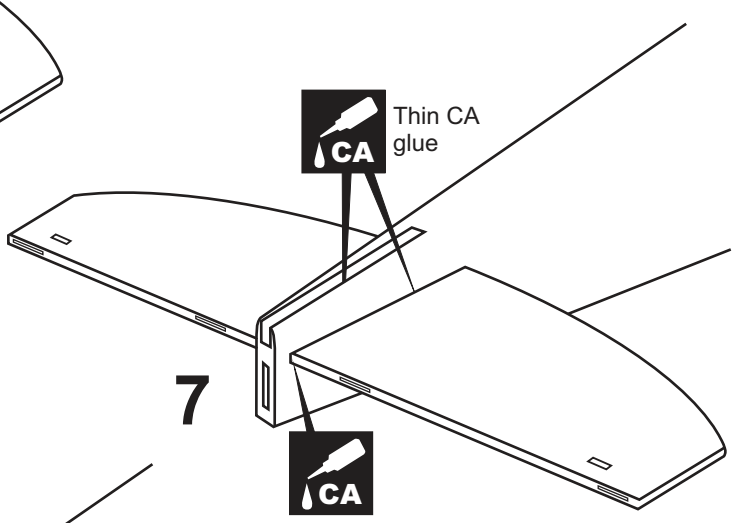

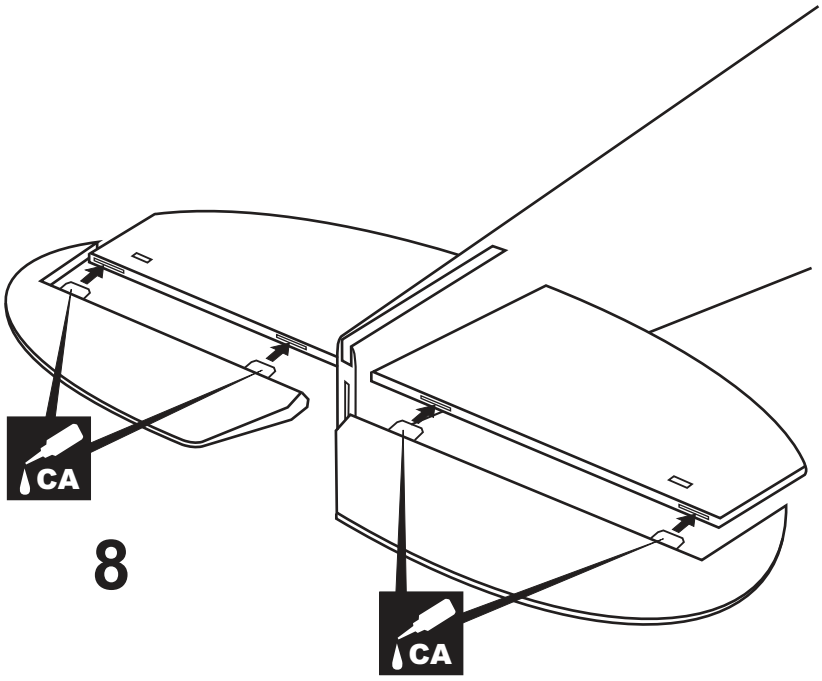

The elevator hinges are pre-glue into the elevator halves. Working with one elevator half for now, apply a thin layer of petroleum jelly to only the pivot point of the two hinges.

Without using glue yet, push the elevator half and its hinges into the hinge slots in the trailing edge of the horizontal stabilizer. There should be a minimal hinge gap and the end of the elevator half should not rub against the horizontal stabilizer.

When satisfied with the fit and alignment, hinge the elevator half to the horizontal stabilizer, using thick CA glue. Make sure to apply a thin layer of CA glue to the top and bottom of both hinges. Repeat the previous procedures to hinge the second elevator half to the other side of the horizontal stabilizer.

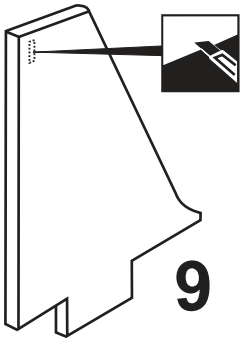

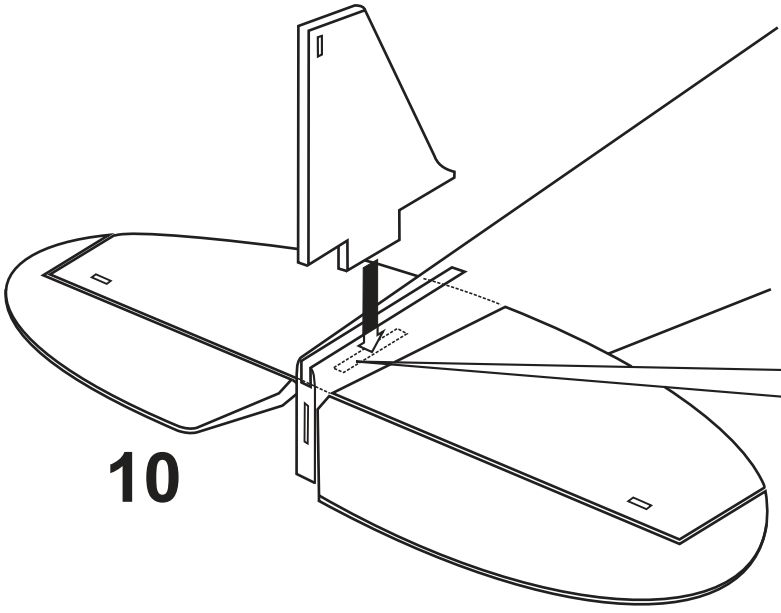

NOTE: You may need to open up the slots of the horizontal stabilizer so that the vertical stabilizer is not too difficult to push in.

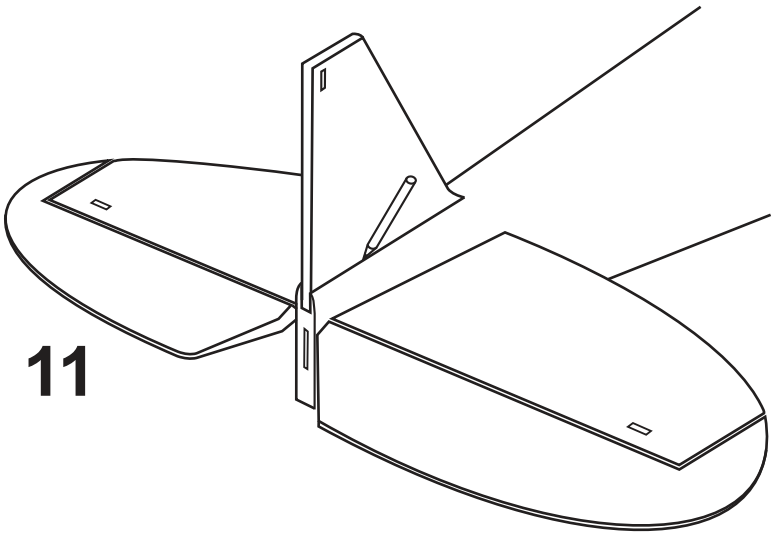

Trial fit the vertical stabilizer in place . Check the alignment of the vertical stabilizer. When you are satisfied with the alignment, use a pencil to trace around the right and left of the stabilizer where it meets the fuselage.

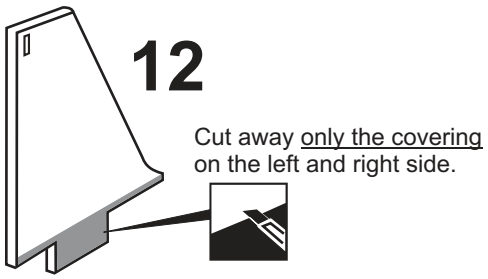

Remove the vertical stabilizer from the fuselage. Using the sharp hobby knife, carefully cut away the covering inside the lines which were marked above.

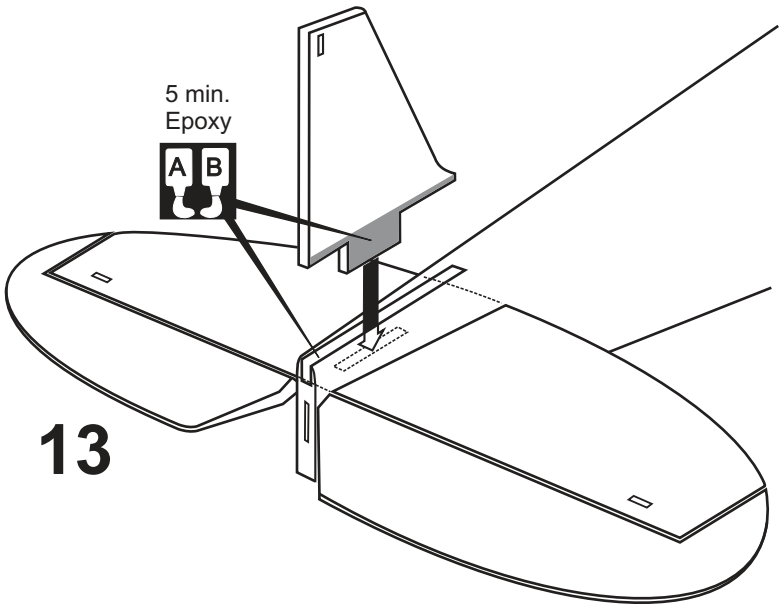

Realign the vertical stabilizer , ensure that the vertical stabilizer is perpendicular to the horizontal stabilizer. Then glue the vertical stabilizer into the fuselage, using a generous amount of 5 min. Epoxy. Apply thin epoxy to each of the two joints and the entire bottom edge of the vertical stabilizer, use a generous amount to ensure to strong bond.

TAIL WHEEL

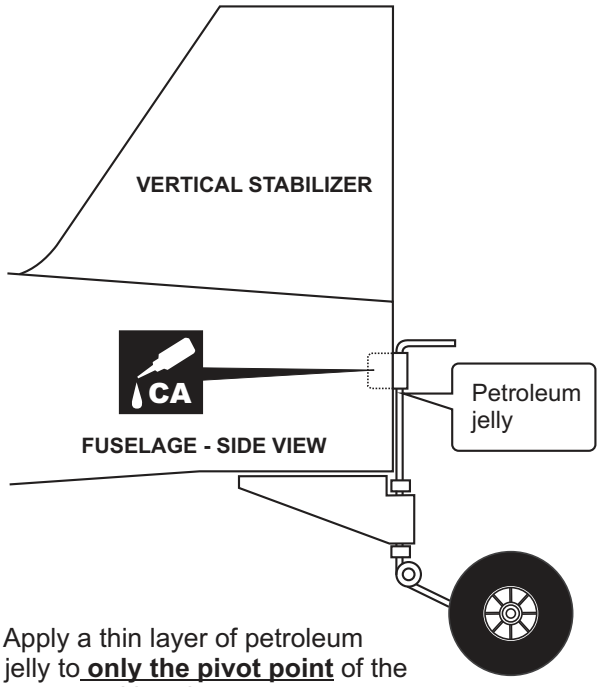

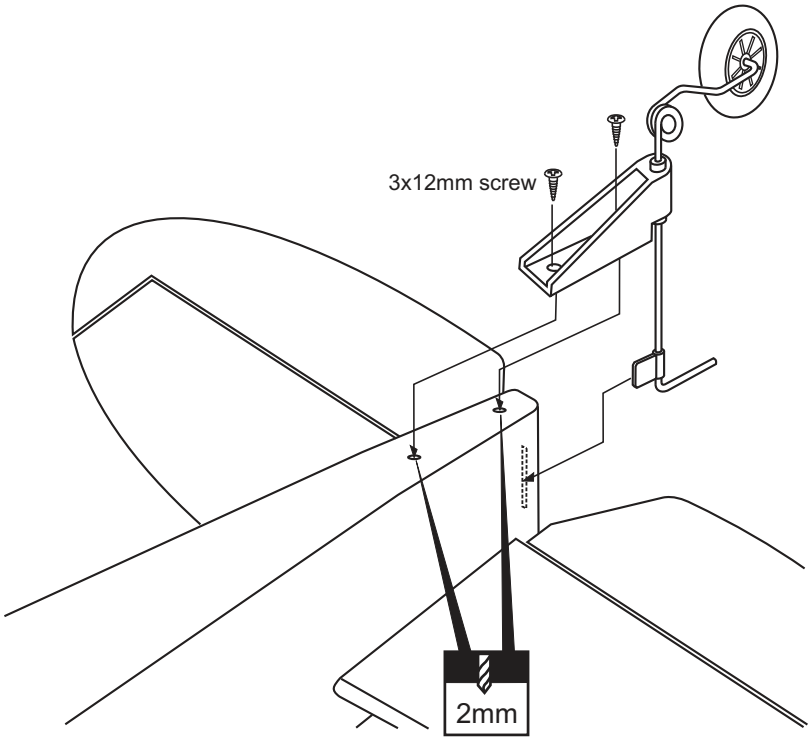

Apply a thin layer of petroleum jelly to **only the pivot point** of the torque rod bearing.

Glue the rudder torque rod bearing into the slot you cut previously in the vertical stabilizer, using a thin layer of CA glue.

3x12.....2

.....2

MAIN LANDING GEAR

4X20mm screw 6

BOTTOM - VIEW / **Unteransicht**

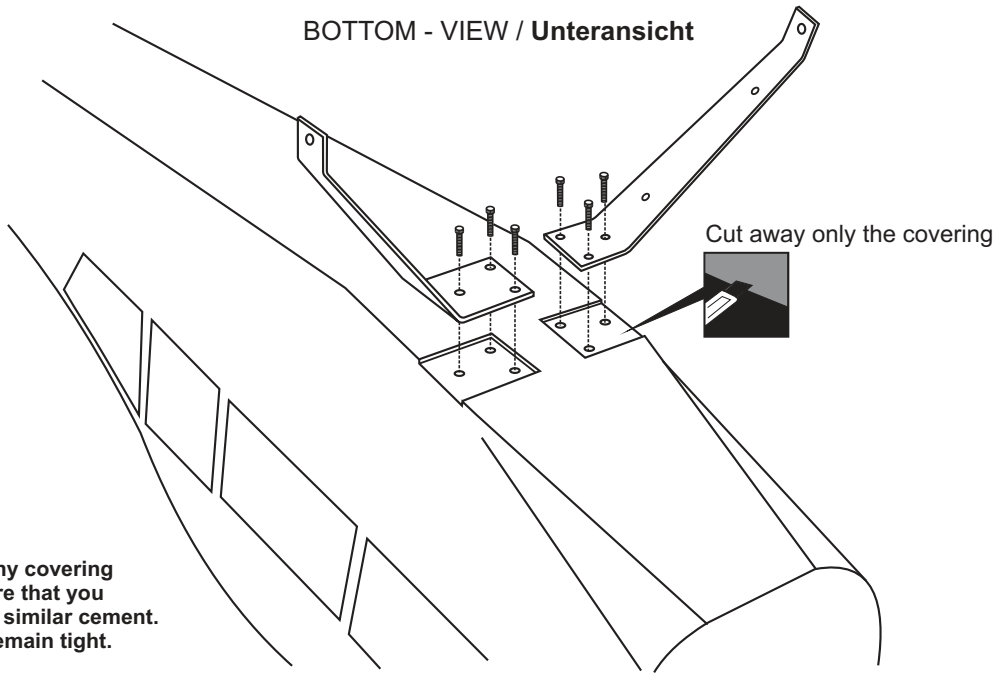

*** WARNING: When removing any covering from the airframe, please ensure that you secure the cut edge with CA or similar cement. This will ensure the covering remain tight.**

MAIN LANDING GEAR

BOTTOM - VIEW / **Unteransicht**

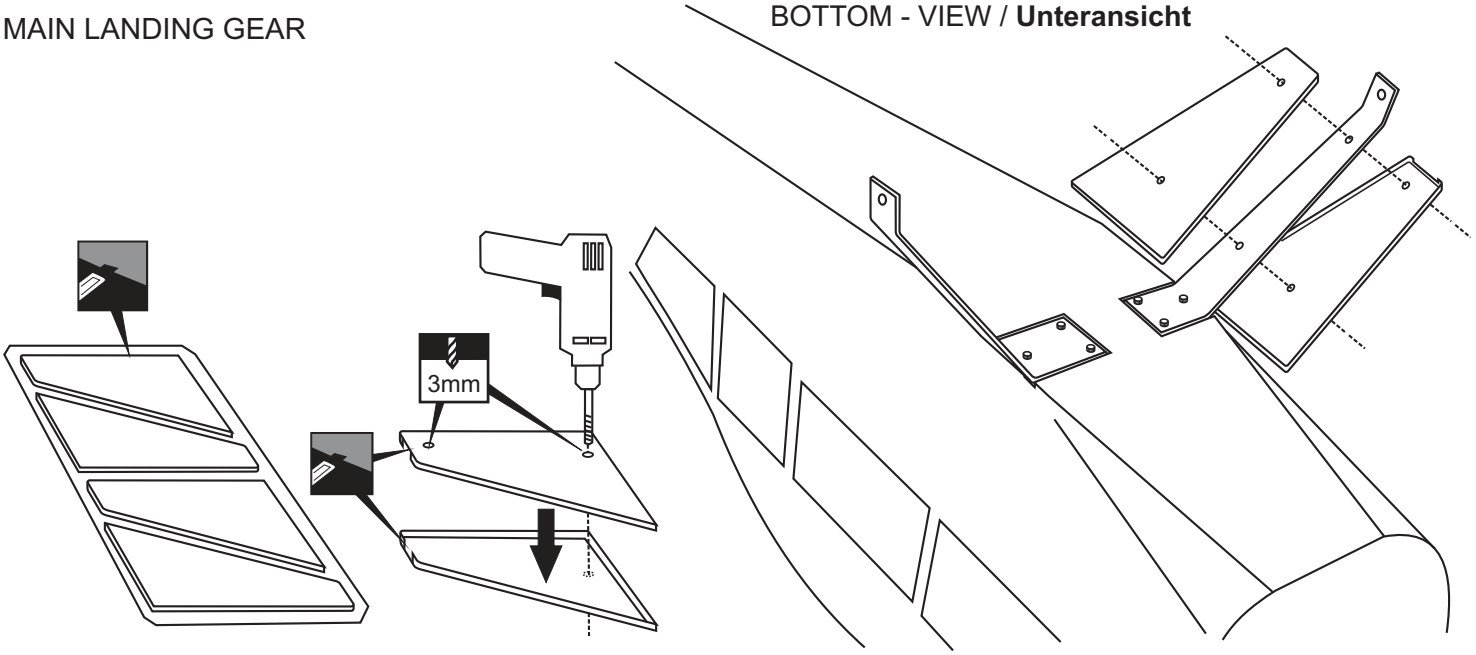

MAIN LANDING GEAR

Connector 4

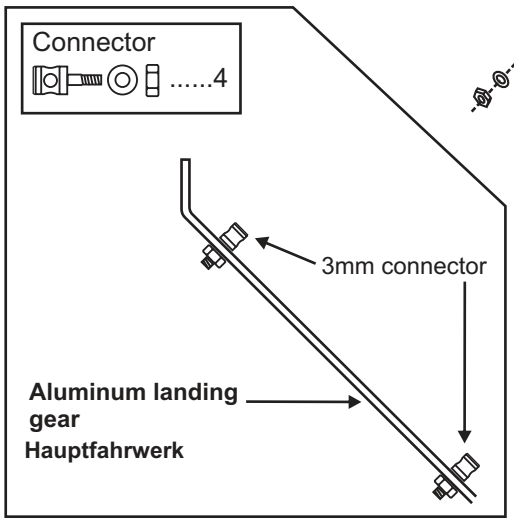

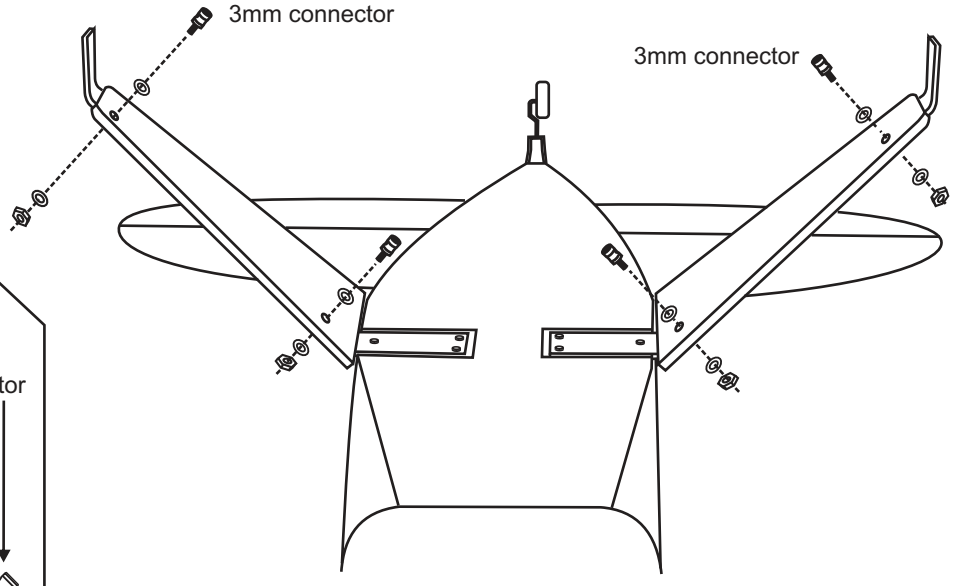

BOTTOM - VIEW / **Unteransicht**

MAIN LANDING GEAR

4X40mm screw 2

4mm nut-washer

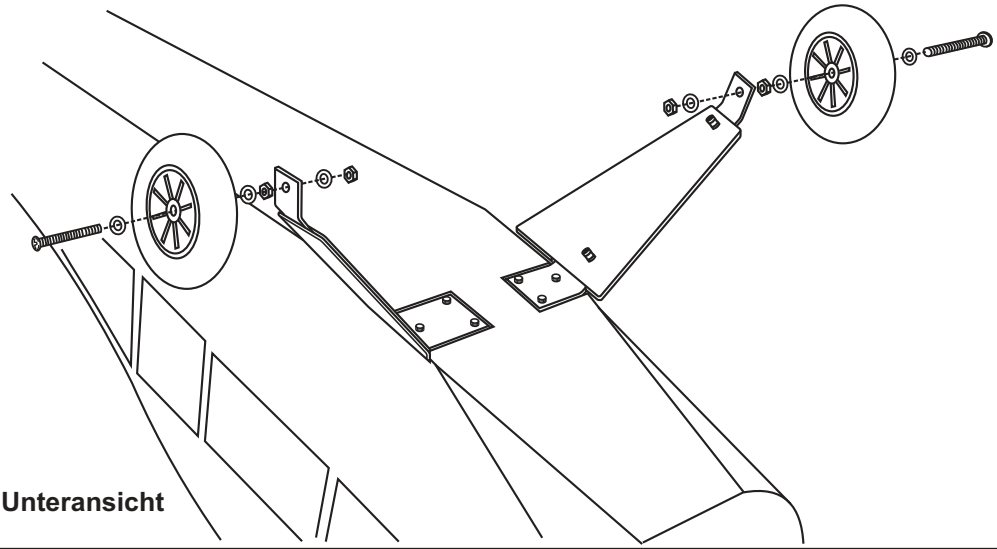

BOTTOM - VIEW / **Unteransicht**

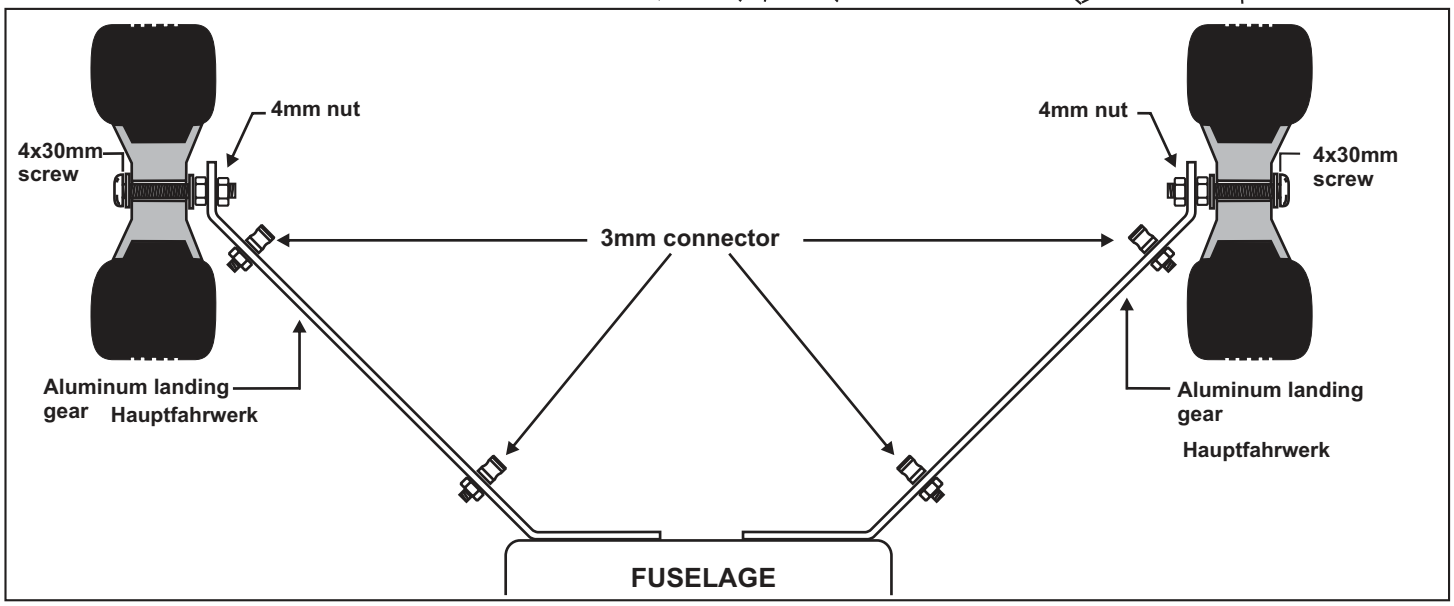

MAIN LANDING GEAR

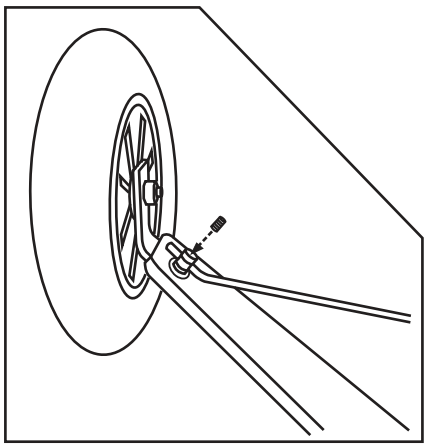

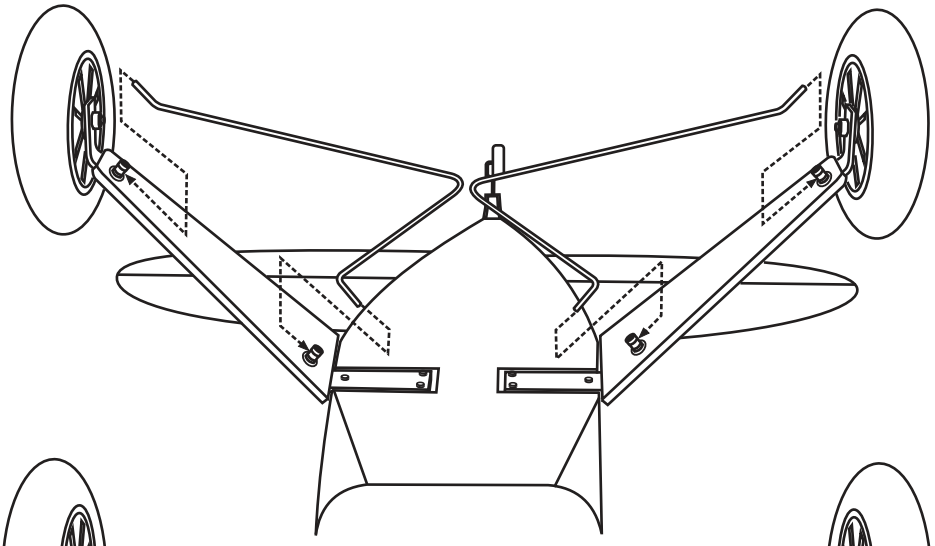

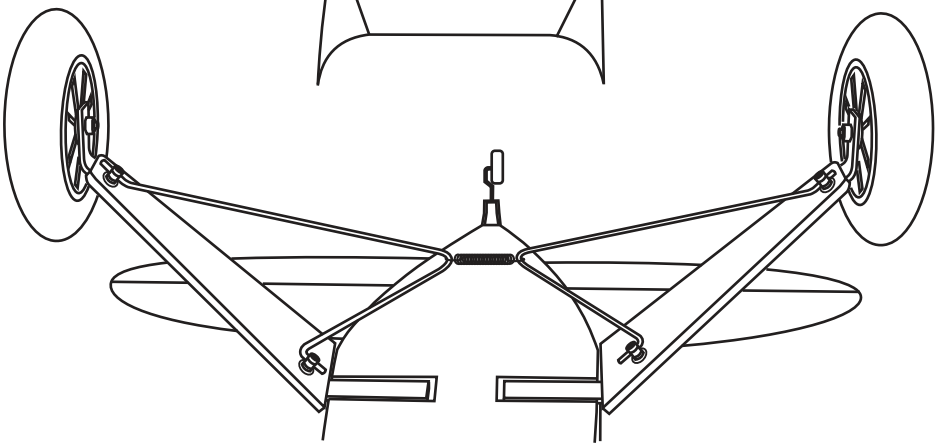

...1

ENGINE

Using a aluminum motor mounting plate as a template, mark the fire-wall where the four holes are to be drilled (1).

Remove the aluminum motor mounting plate and drill a 5mm hole through the plywood at each of the four marks marked (2).

Note: The aluminum motor mounting and screws included with the engine.

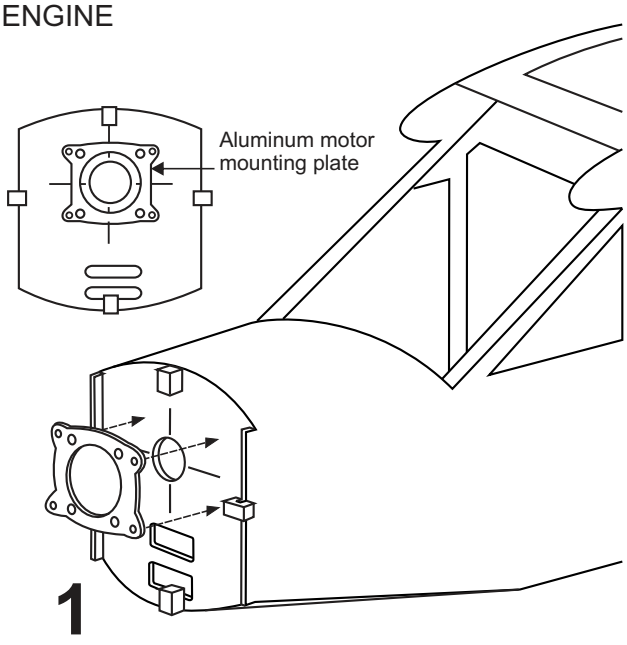

1

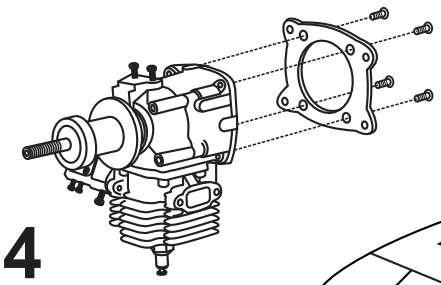

4

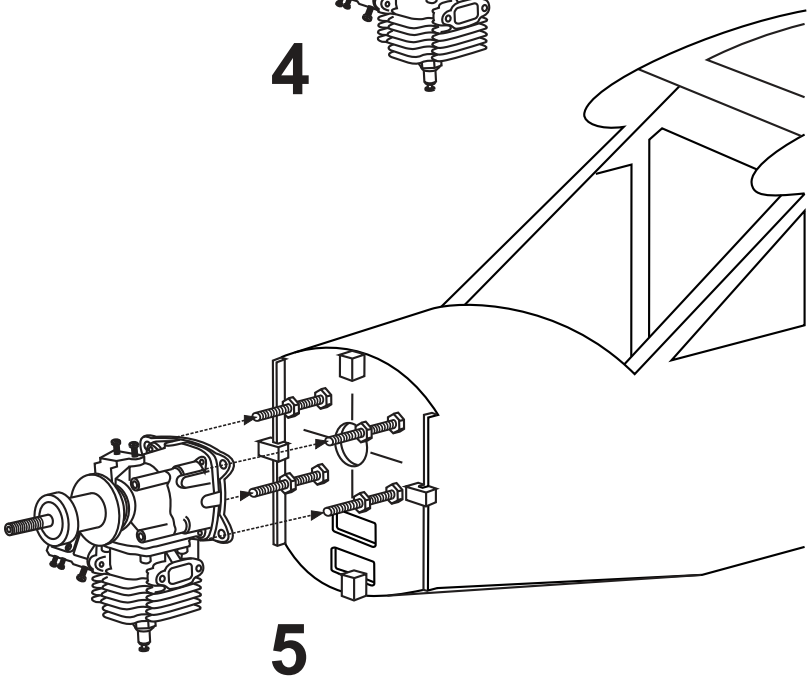

5

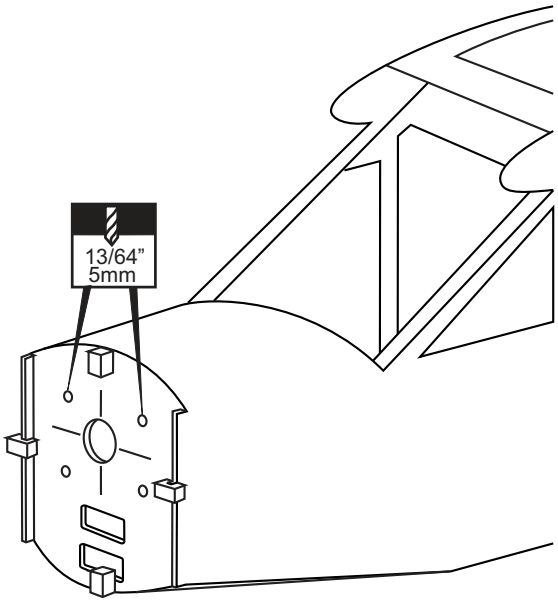

2

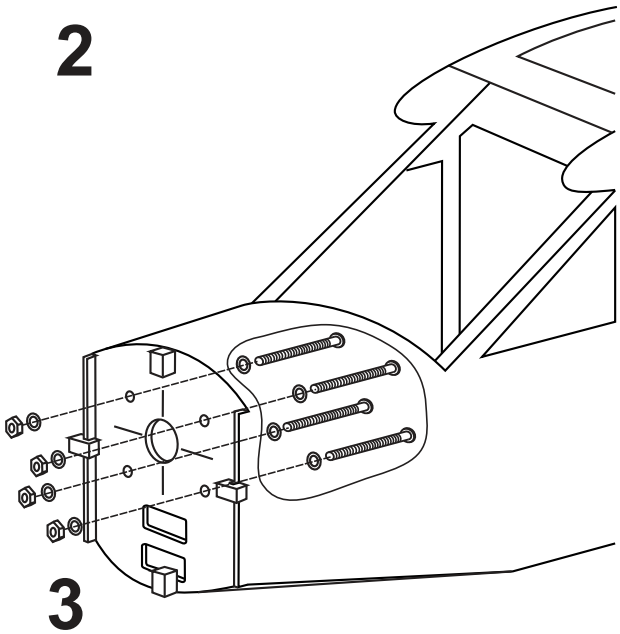

3

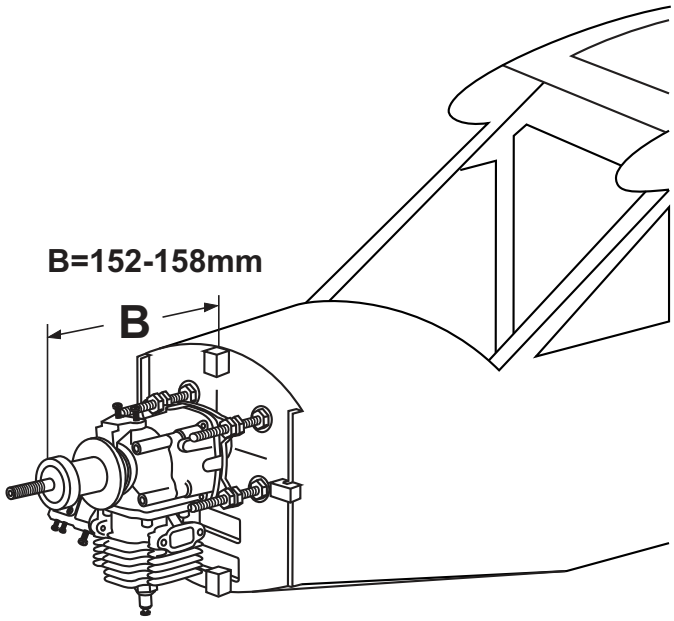

6

5X60mm screw 4

5mm washer 16

5mm nut 12

ELECTRIC MOTOR

Using a aluminum motor mounting plate as a template, mark the fire-wall where the four holes are to be drilled (1).

Remove the aluminum motor mounting plate and drill a 5mm hole through the plywood at each of the four marks marked (2).

Note: The aluminum motor mounting and screws included with the motor.

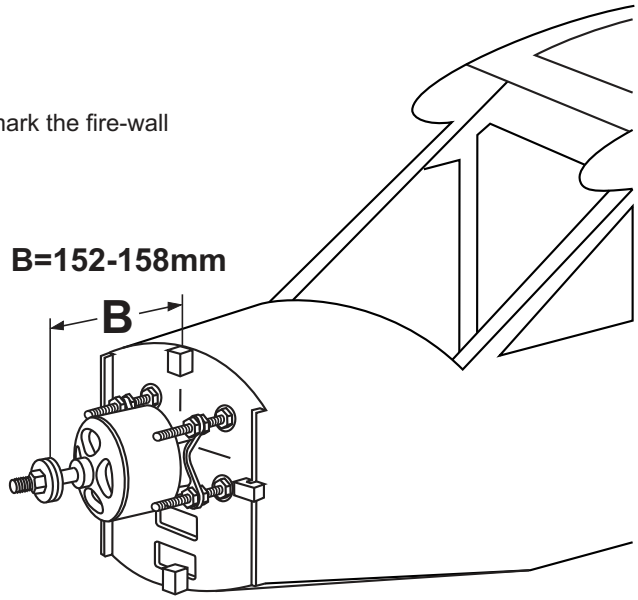

COWLING

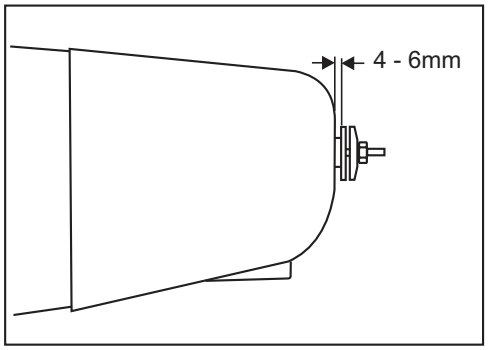

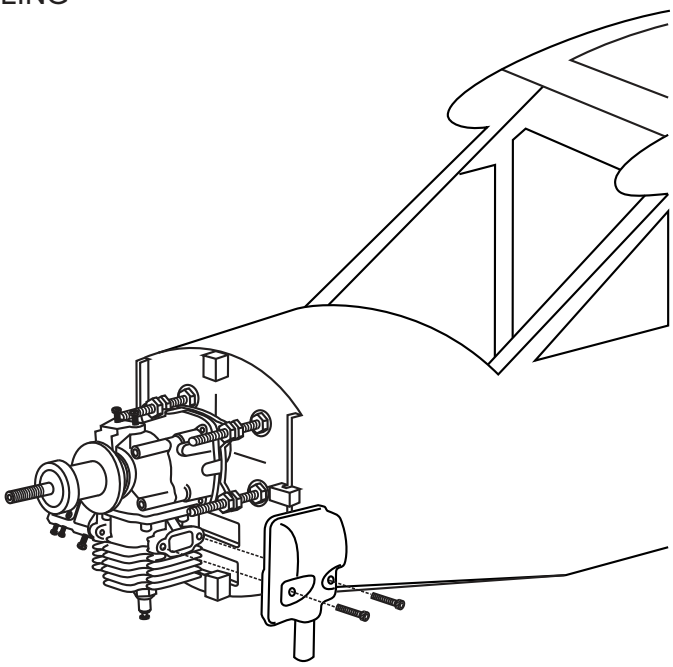

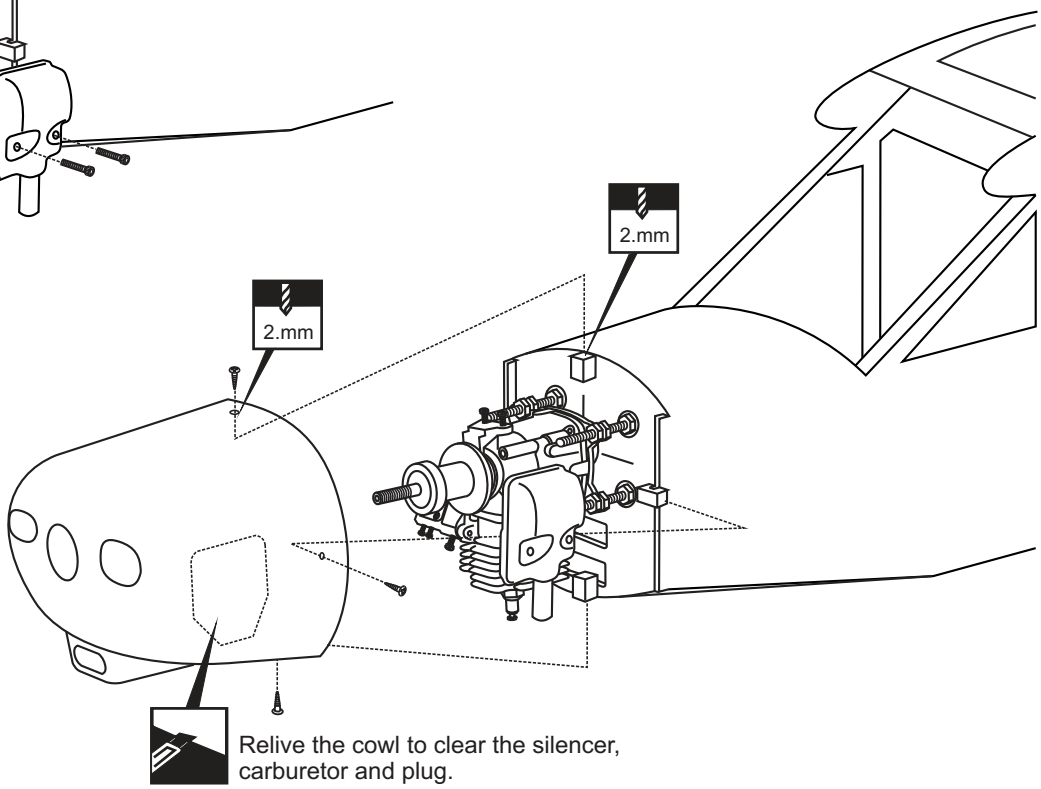

Relive the cowl to clear the silencer, carburetor and plug.

23x8mm screw 4

FUEL TANK & LIPO. BATTERY

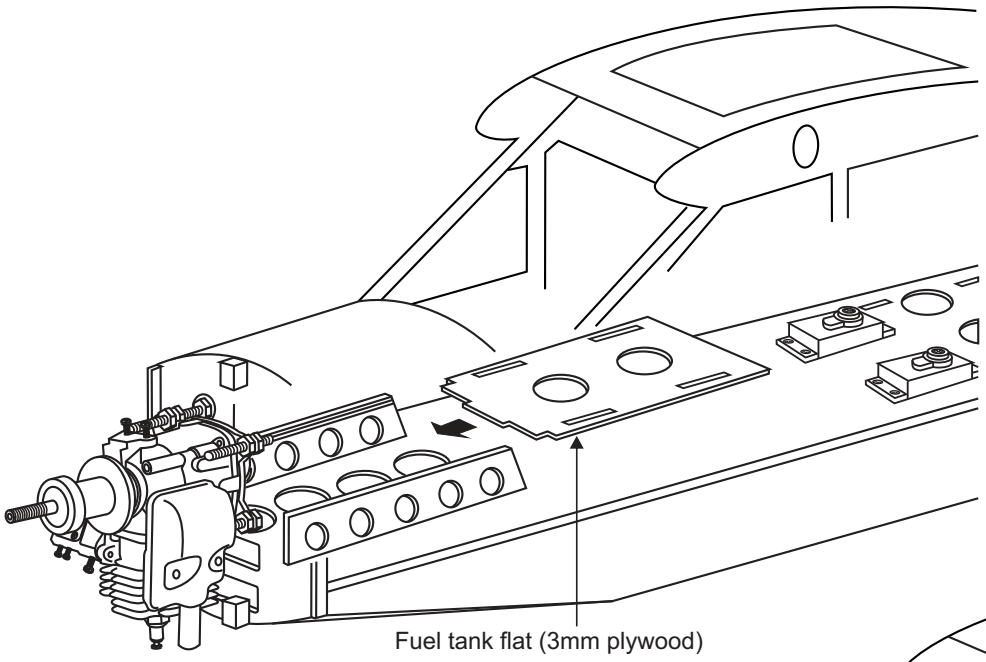

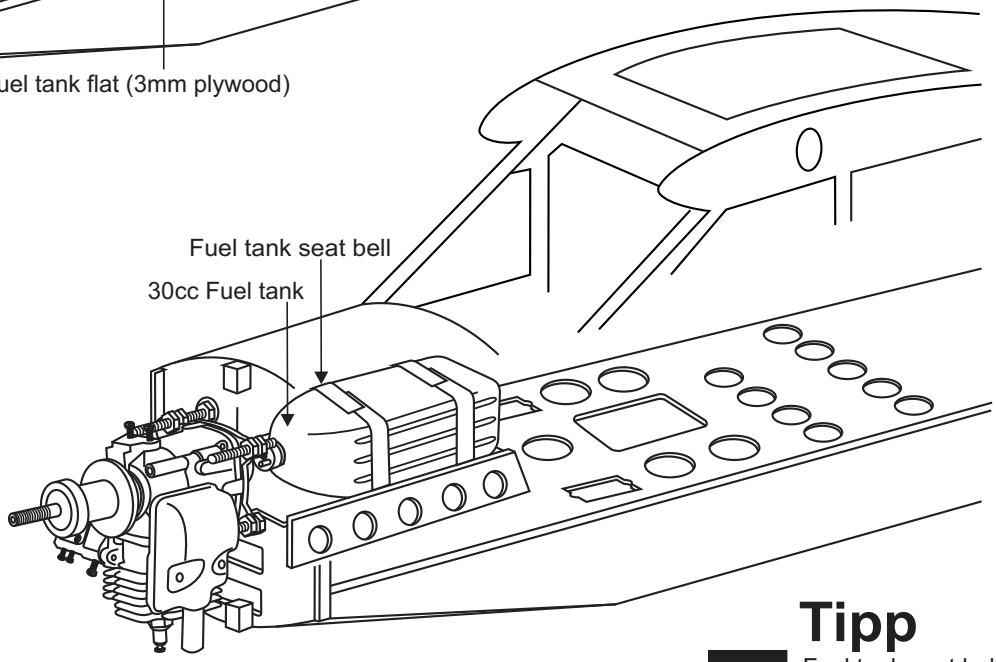

Tipp

X Fuel tank seat bell

Akku Kiettband
aus dem **PICHLER**
Sortiment
Best.Nr. C4739

Fuel tank assembly

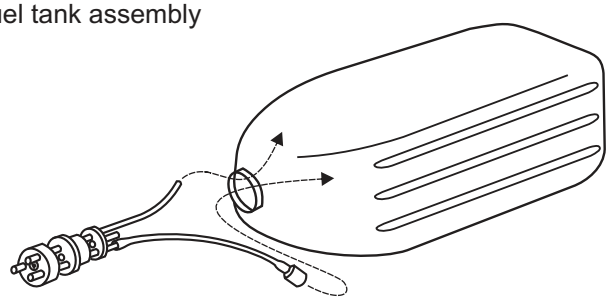

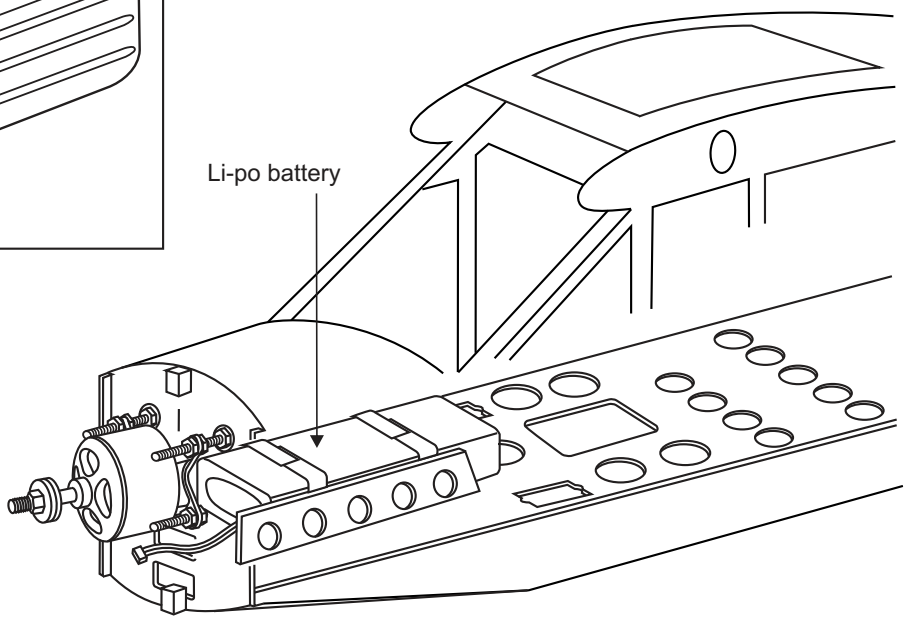

SERVO

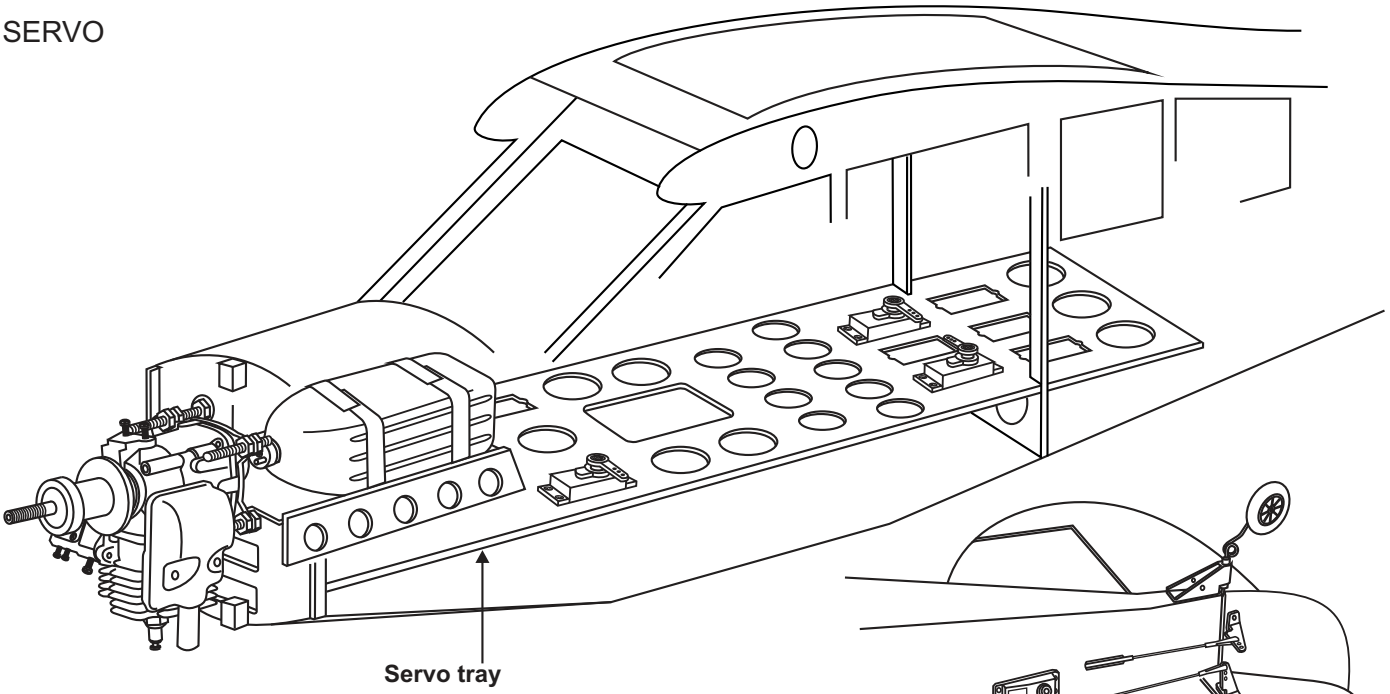

IN CASE OF THE ELEVATOR SERVO IN SIDE OF THE FUSELAGE

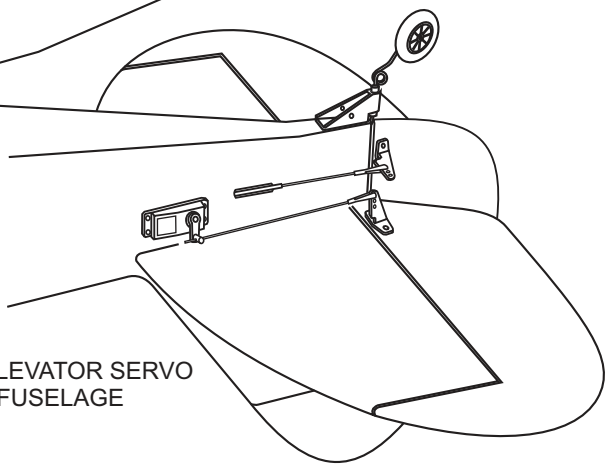

IN CASE OF THE ELEVATOR SERVO OUT SIDE OF THE FUSELAGE

SERVO TRAY - TOP VIEW

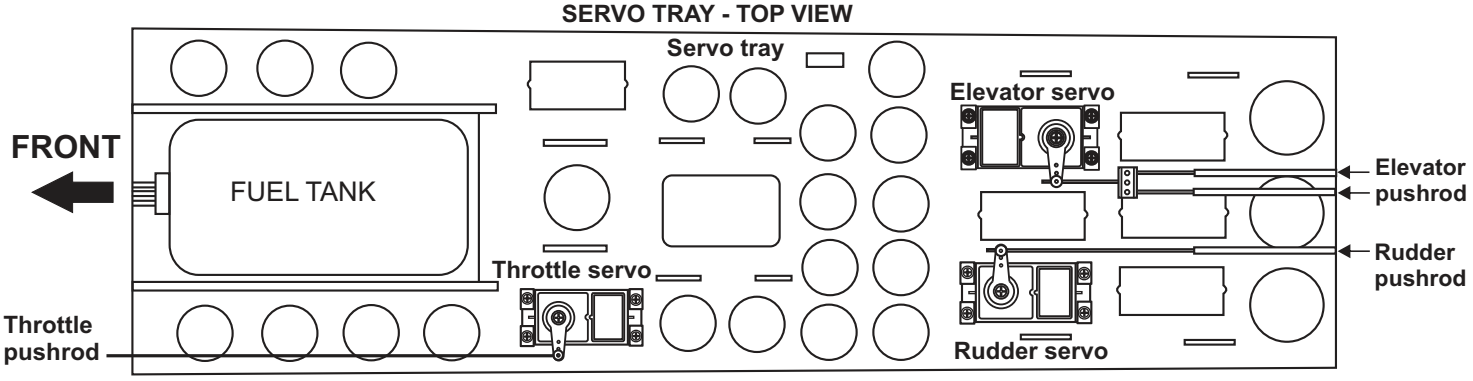

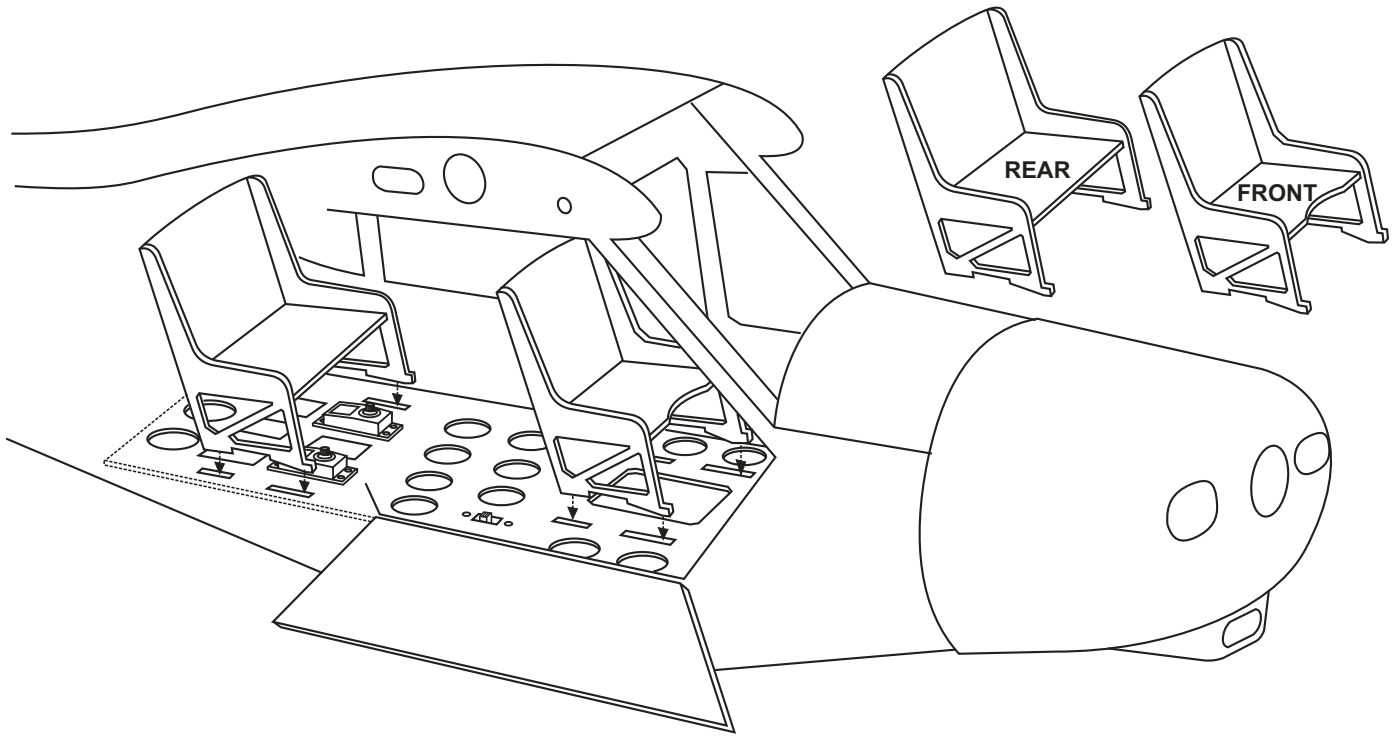

SERVO

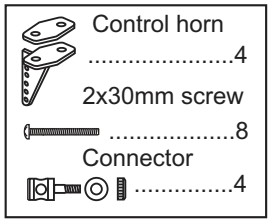

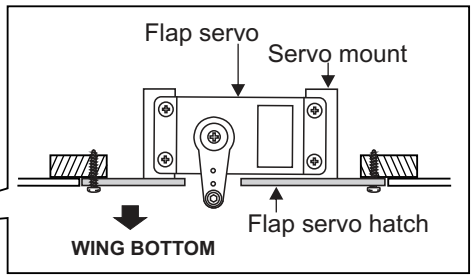

X

Aileron, flap servo and light extension cord not include.

BOTTOM - VIEW / **Unteransicht**

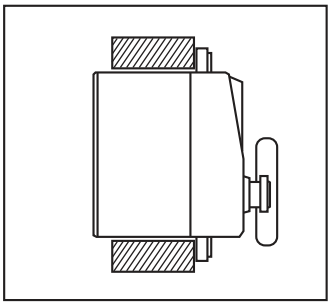

Aileron servo and hatch
RIGHT

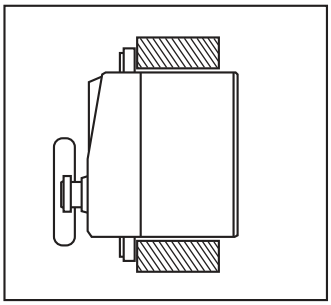

Aileron servo and hatch
LEFT

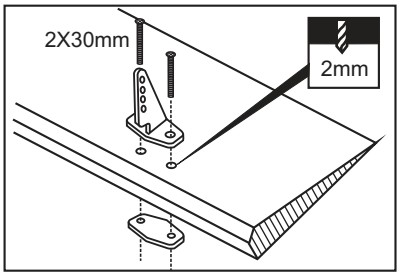

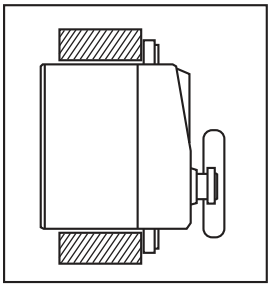

Flap servo and hatch
RIGHT

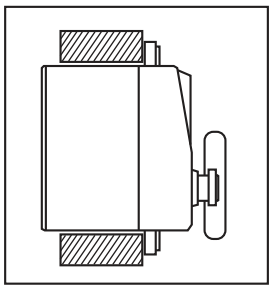

Flap servo and hatch
LEFT

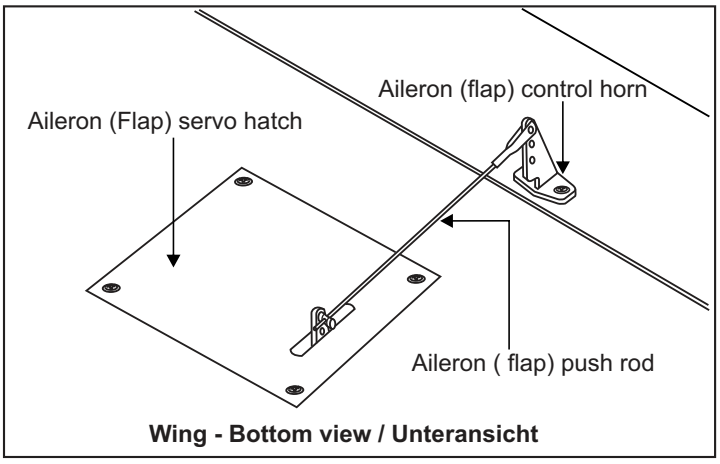

Wing - Bottom view / Unteransicht

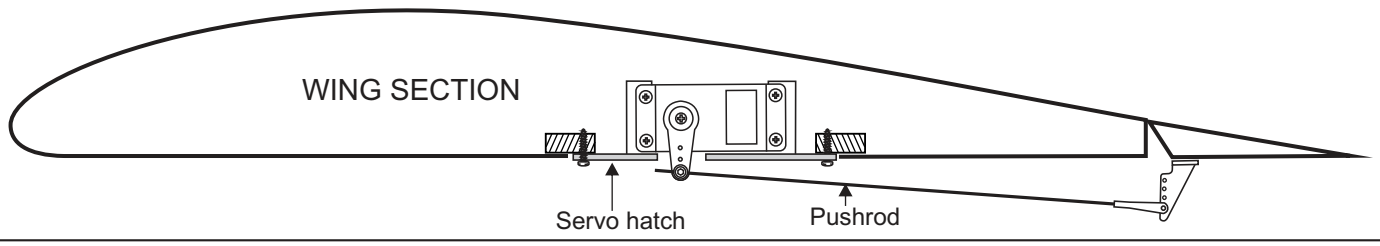

WING

BOTTOM - VIEW / **Unteransicht**

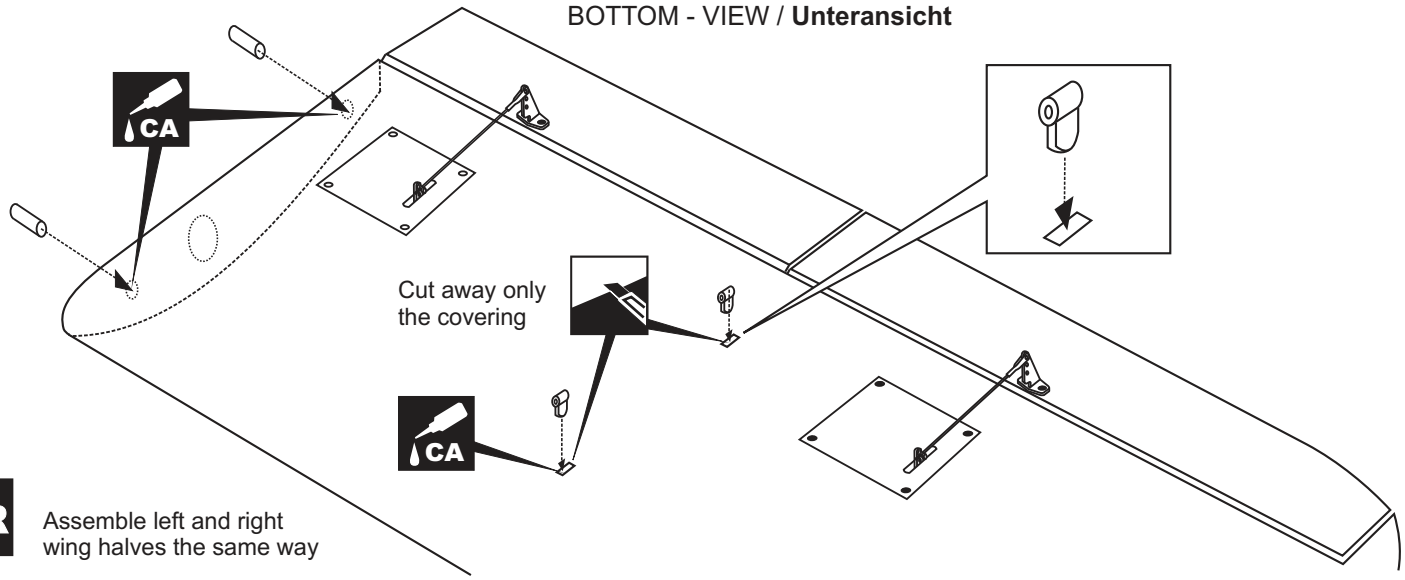

L/R Assemble left and right wing halves the same way

WING

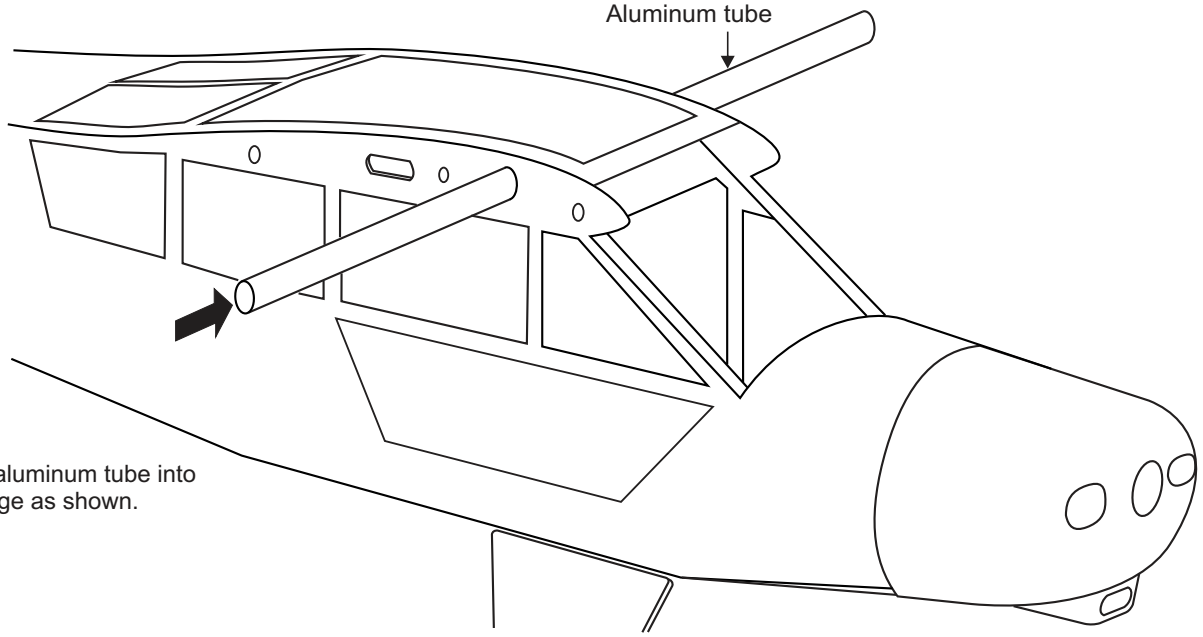

Slide the aluminum tube into the fuselage as shown.

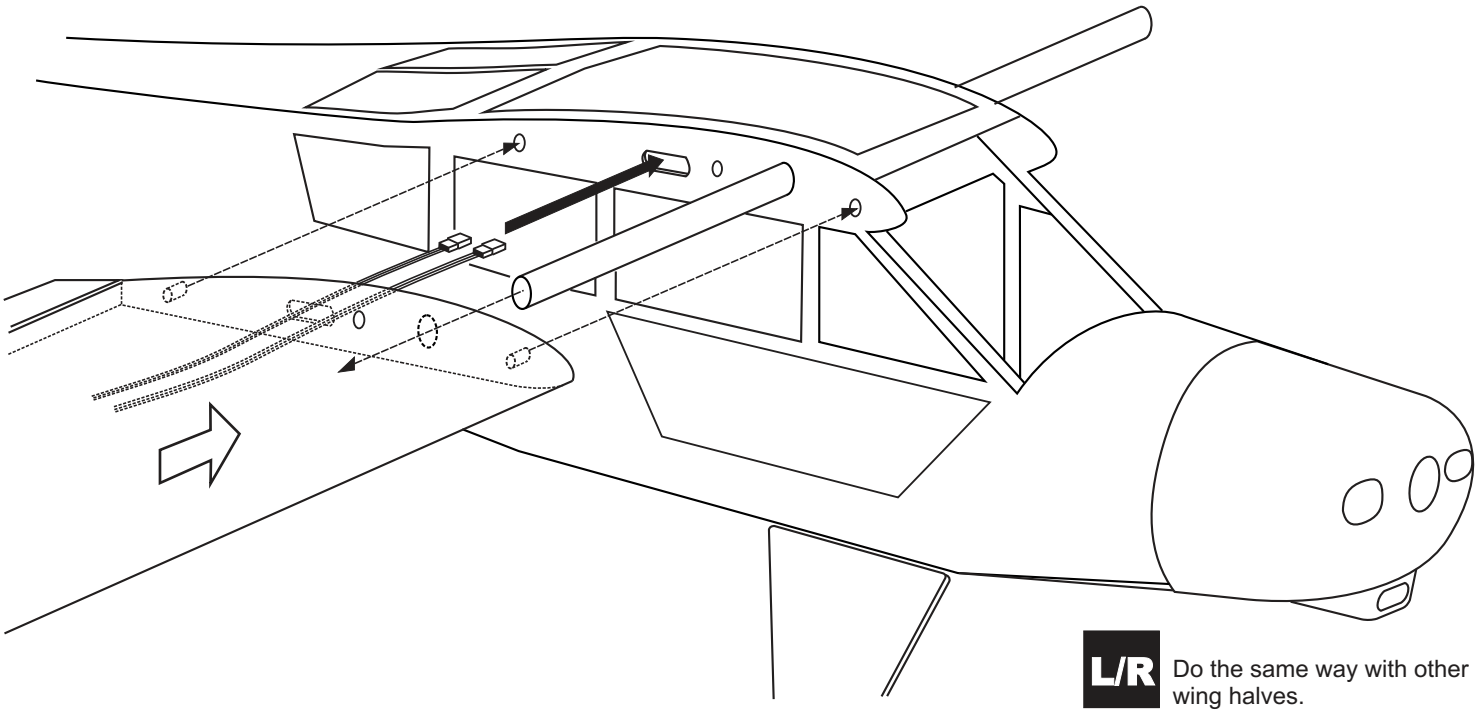

L/R Do the same way with other wing halves.

WING

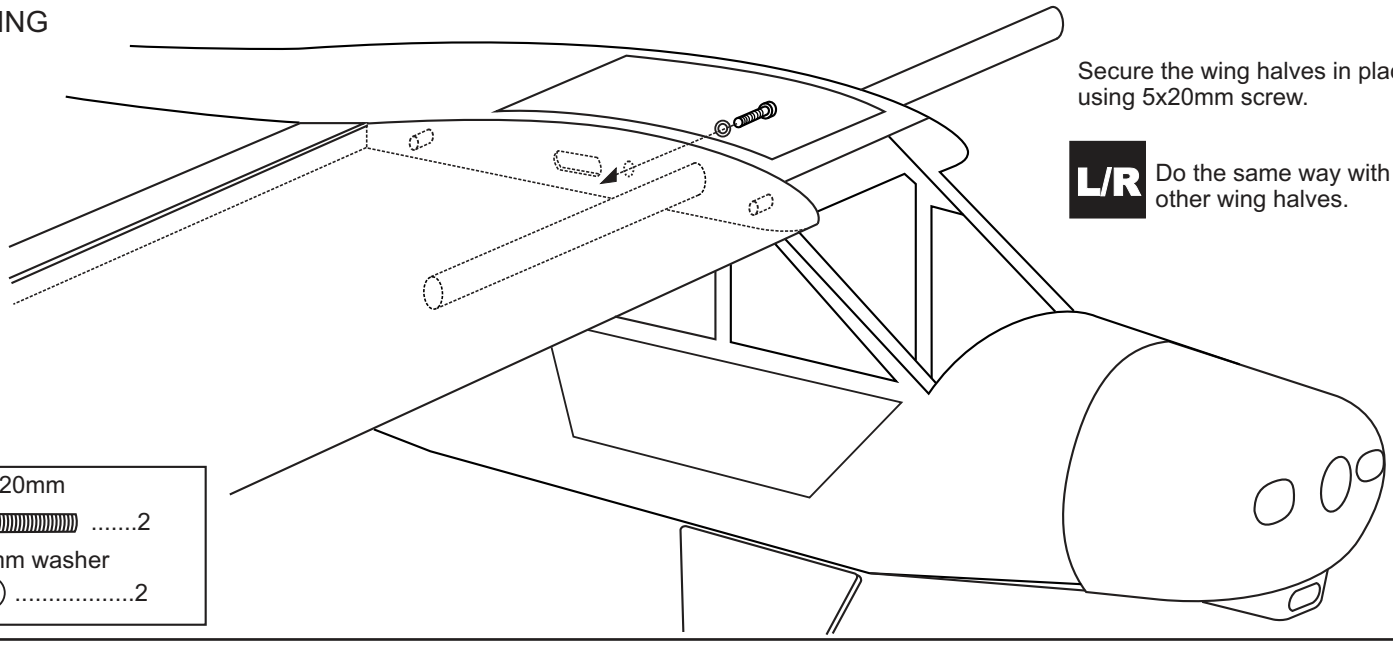

Secure the wing halves in place using 5x20mm screw.

L/R Do the same way with other wing halves.

5x20mm 2
5mm washer 2

WING

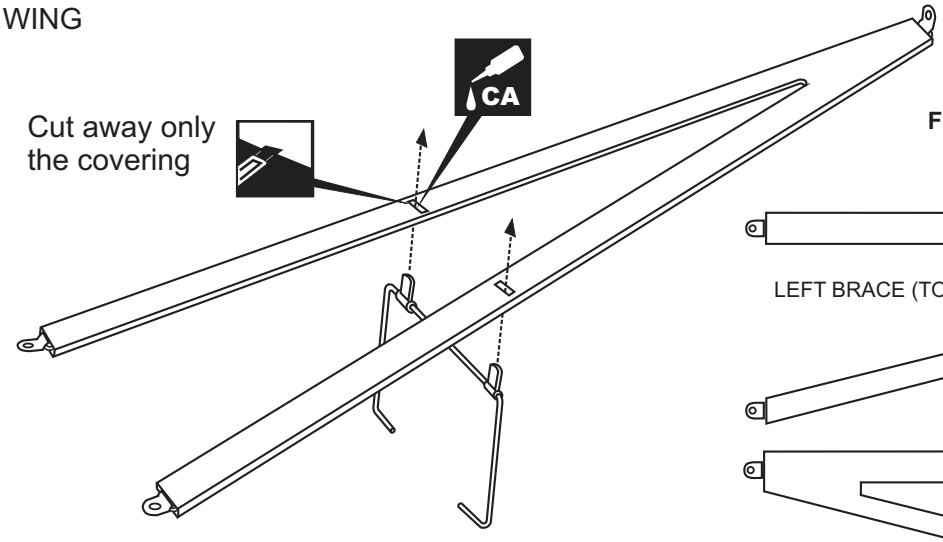

Cut away only the covering

BOTTOM - VIEW / **Unteransicht**

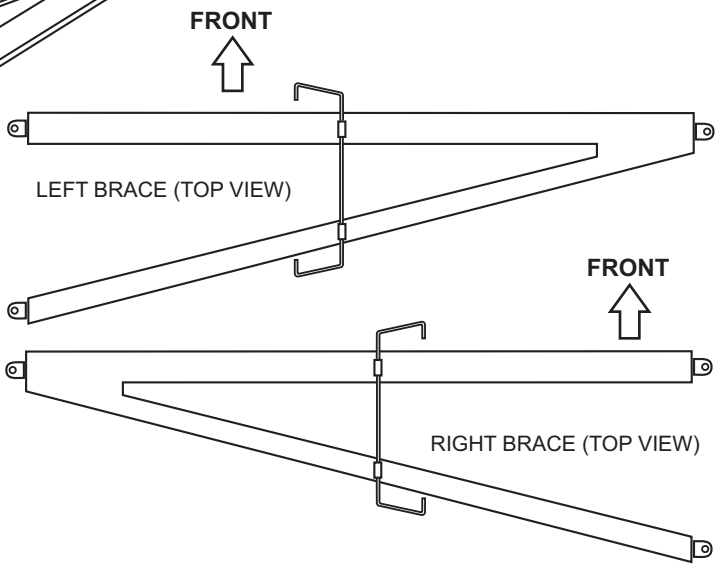

.....4

WING

3x12mm 4
3x12mm 2

L/R Do the same way with other wing halves.

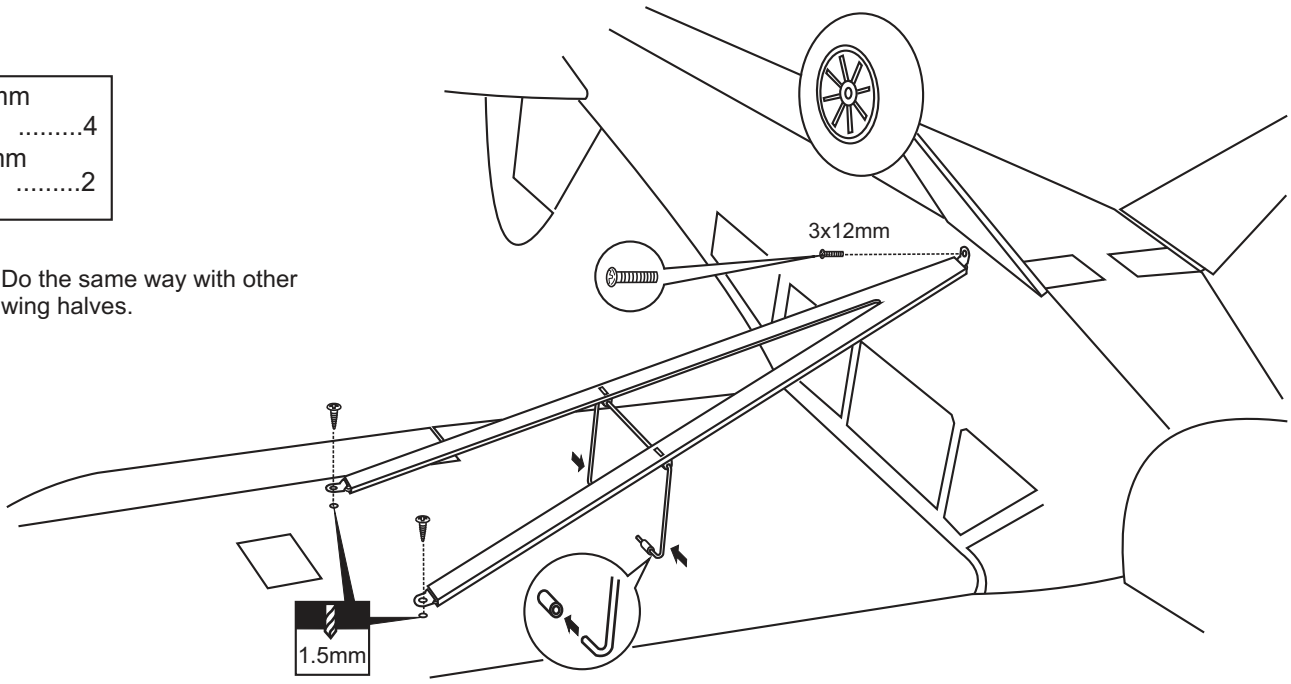

TAIL

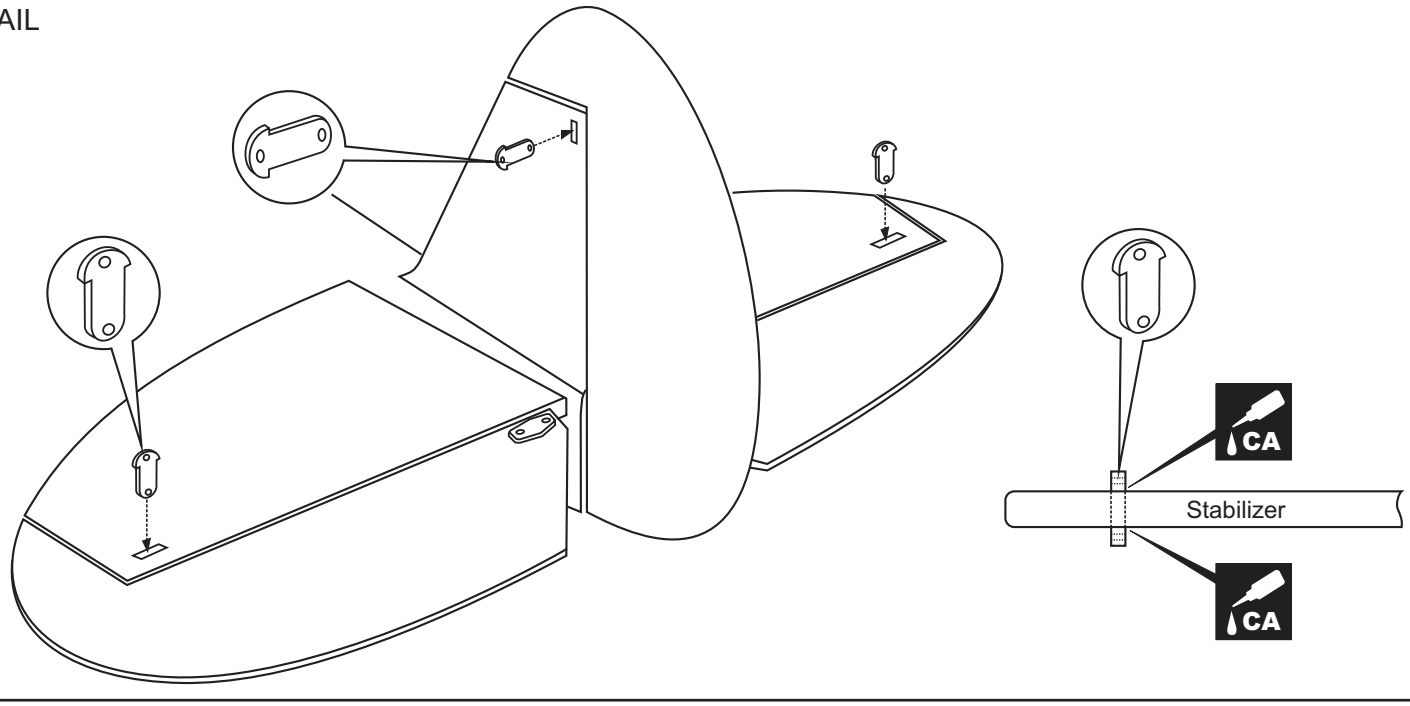

TAIL

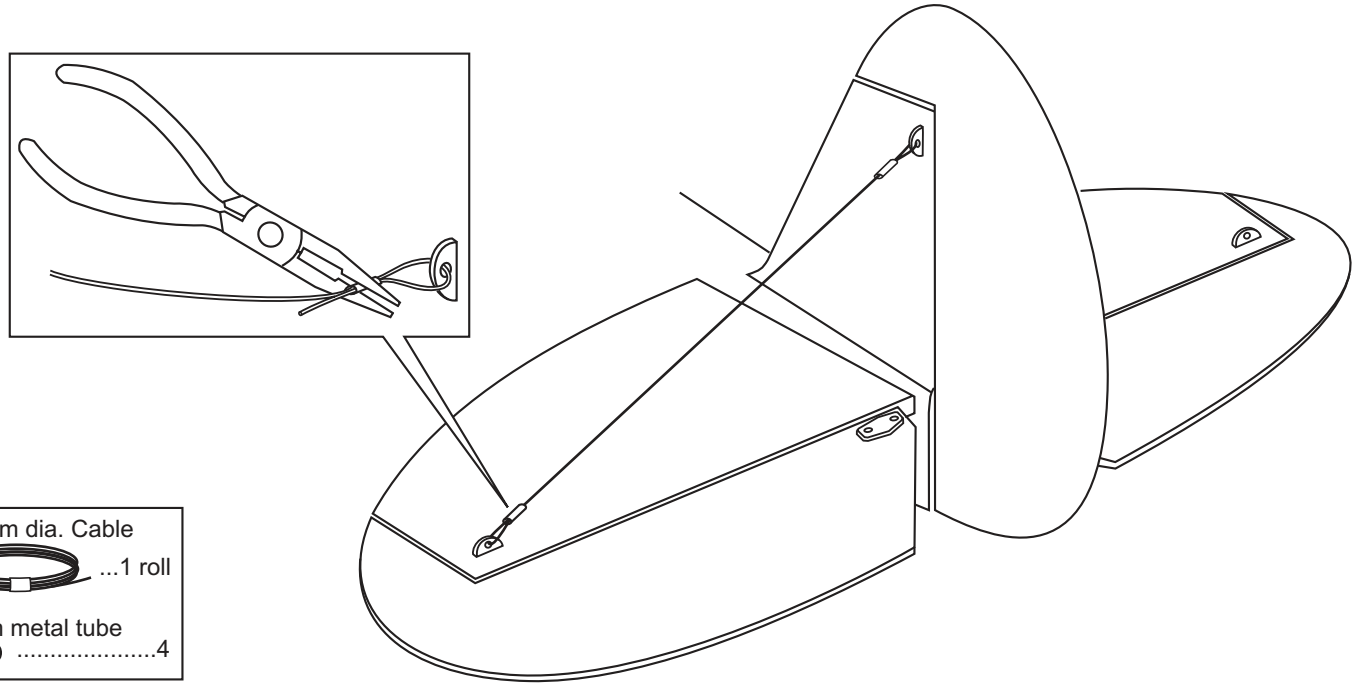

TAIL

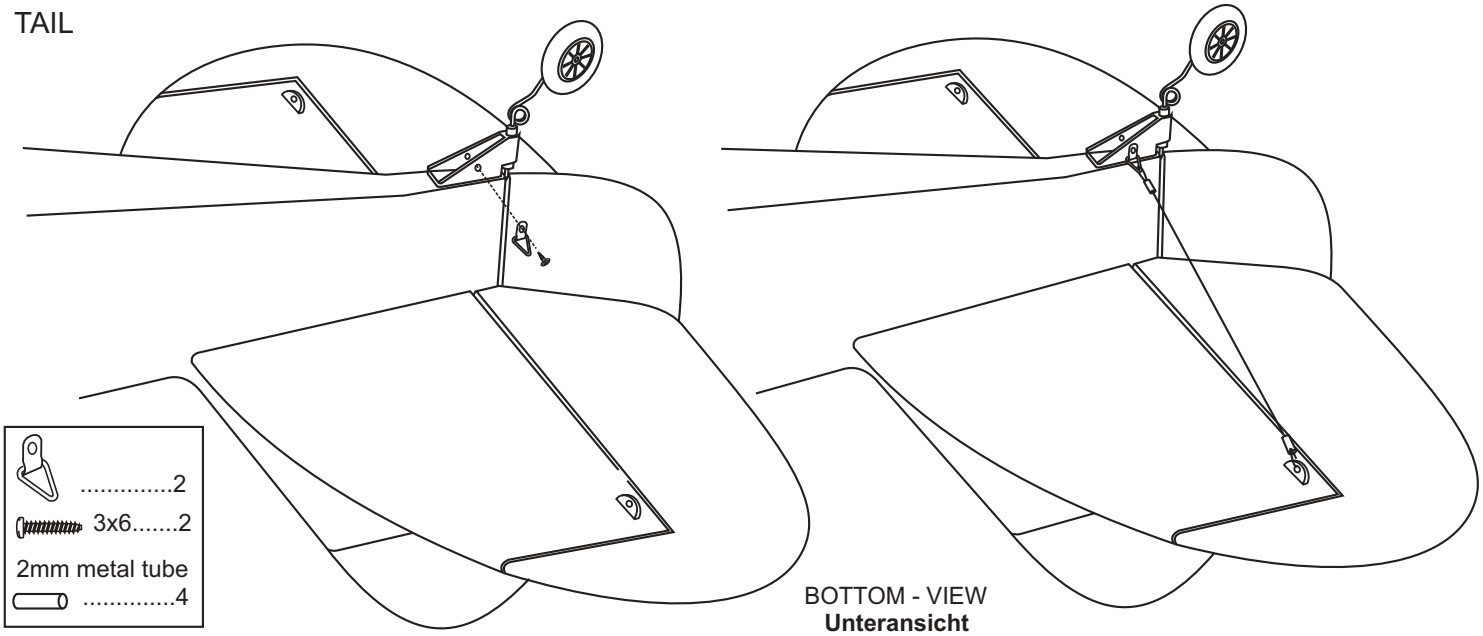

BOTTOM - VIEW
Unteransicht

LIGH

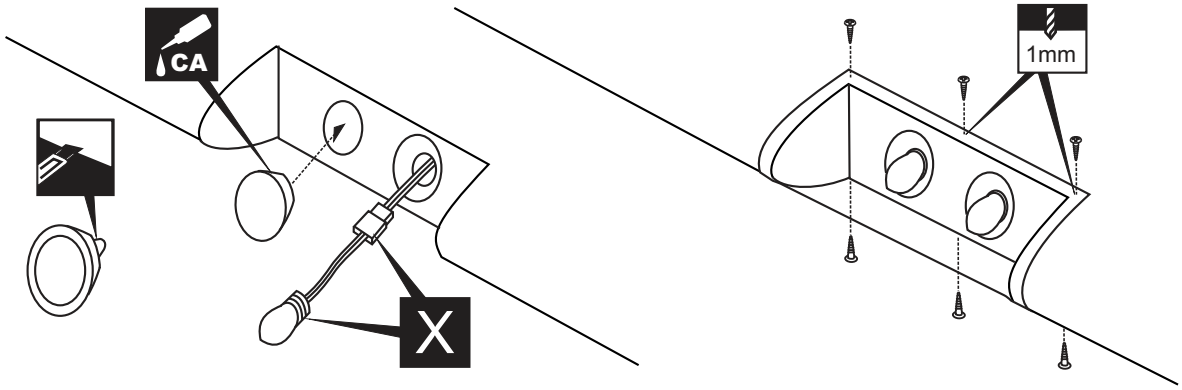

2x6mm 6

DECOR

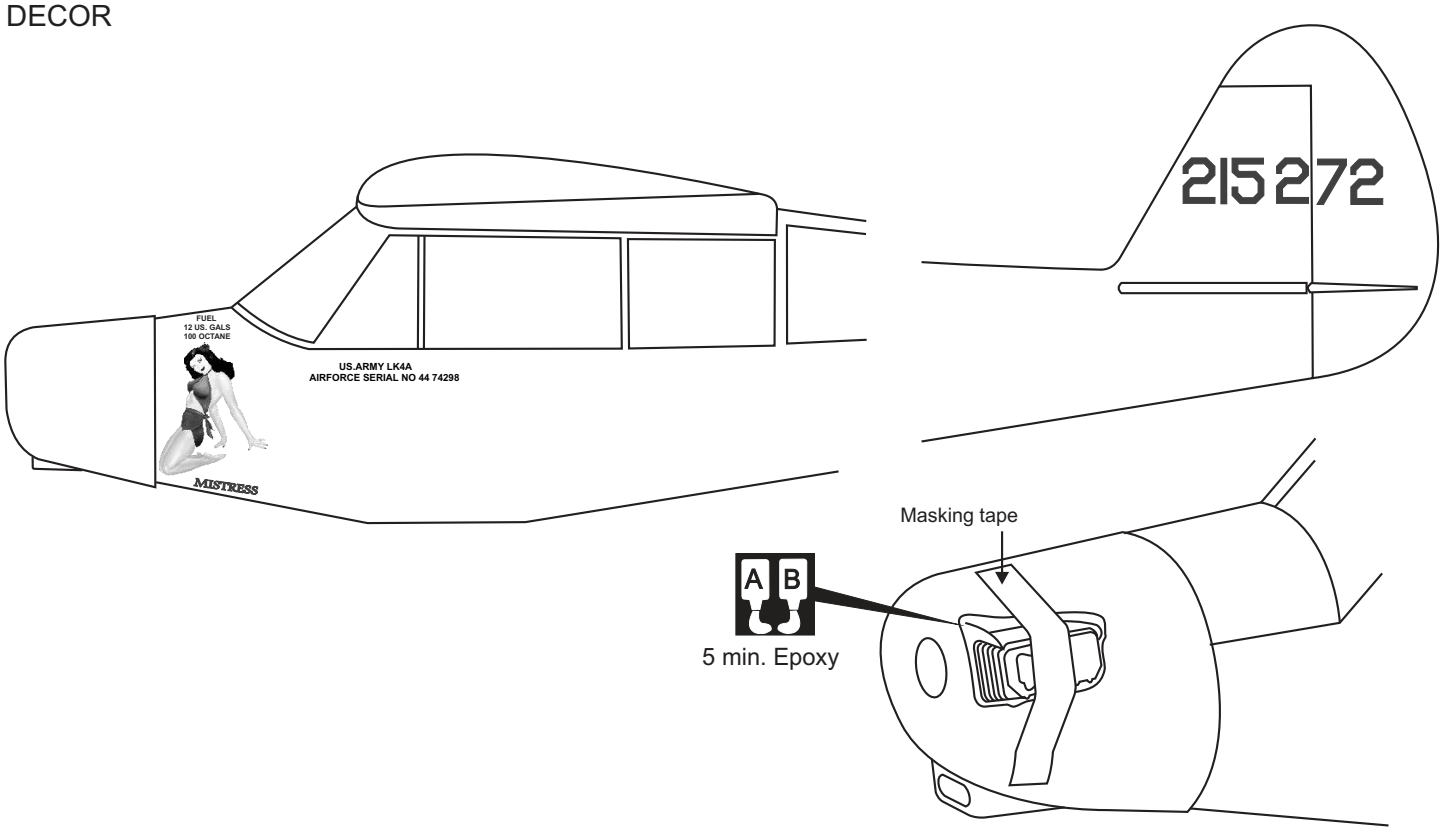

Note: Cut out the stickers and apply them in the proper area. Do not peel the backing paper off all at once. Peel off one corner of the backing and cut off with scissors. Arrange sticker on model and when satisfied adhere the corner without backing.
Carefully peel back the rest of the backing while at the same time adhering the rest of the sticker.
Try not to make air bubbles, if there are some, carefully puncture sticker (center of bubble) but not model surface with the tip of the knife or sharp pin and squeeze out the air.
At curves stretch sticker and apply a little heat so that no ceases occur. Cut off the excess that is produced.

BALANCE

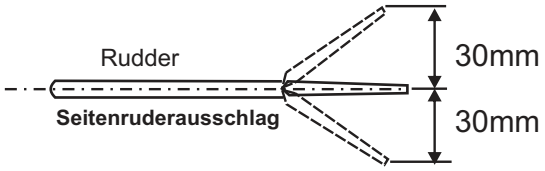

Do not try to fly an out-of balance model!

Überprüfen Sie vor dem Flug den Schwerpunkt.

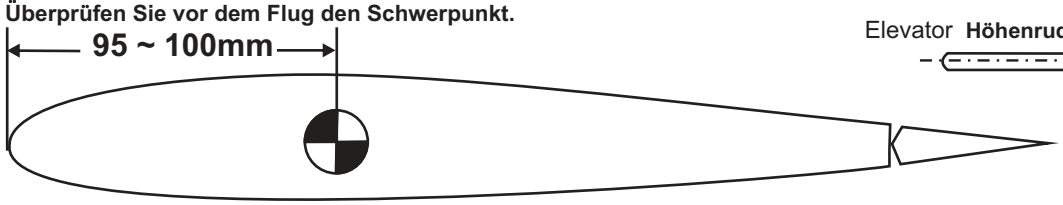

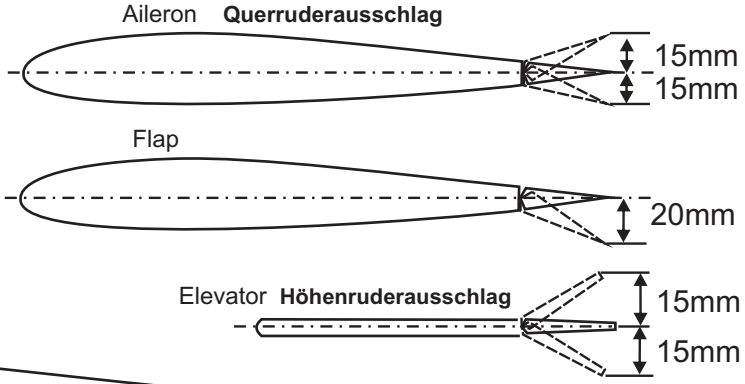

IMPORTANT: Please do not clean your model with pure alcohol, only use liquid soap with water or use glass cleaner to clean on surface of your model to keep the colour not fade.

All details are subject to change without notice !

Technische Änderungen und Irrtümer vorbehalten !